GoldStar

= QUELLE 104.752.9
104.753.9

DOUBLE DECK VIDEO CASSETTE RECORDER

SERVICE MANUAL

MODEL: DV13P

CAUTION

BEFORE SERVICING THE UNIT, READ THE "SAFETY PRECAUTIONS" IN THIS MANUAL.

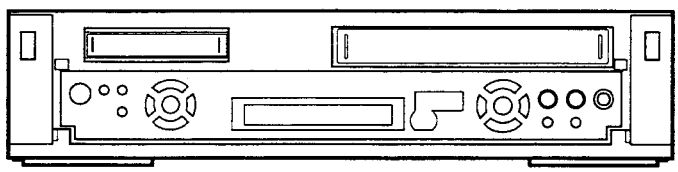

TABLE OF CONTENTS

SECTION 1 SUMMARY

KEY TO ABBREVIATIONS 1-4
IMPORTANT SAFETY PRECAUTIONS 1-5
• Precautions during Servicing 1-5
SAFETY CHECK AFTER SERVICING 1-6
• Insulation resistance test 1-6
• Dielectric strength test 1-6
• Clearance distance 1-6
• Leakage current test 1-6
INTRODUCTION 1-7
FEATURES 1-7
SPECIFICATIONS 1-7
LOCATION OF CUSTOMER CONTROLS 1-8

SECTION 2 CABINET & MAIN FRAME

SERVICE FIXTURE CONNECTING METHOD 2-1
1. SVC FIXTURE Connecting Method 2-1
2. Electrical Service Fixture List 2-1
CABINET DISASSEMBLY 2-2
1. Top Case 2-2
2. Bottom Cover 2-2
3. Front Panel 2-2
CIRCUIT BOARD DISASSEMBLY 2-3
1. Circuit Board Arrangement 2-3
2. VHS Main Circuit Board 2-3
3. Power Circuit Board 2-3
4. 8mm Main Circuit Board 2-3
5. 8mm/VHS Pre-Amp Circuit Board 2-4
6. 8mm/VHS Key Function Circuit Board 2-4
EXPLODED VIEWS 2-5
1. Cabinet & Main Frame Section 2-5
2. Packing Accessory Section 2-7
3. Remote Control Section 2-8

SECTION 3 ELECTRICAL

ELECTRICAL ADJUSTMENT PROCEDURES 3-1
• Electronic Test Equipment Requirement 3-1
1. VHS Circuit Adjustment 3-1
1-1. Servo Circuit 3-1
1-1-1. PG Adjustment 3-1
1-2. Audio Circuit 3-2
1-2-1. Record Bias Adjustment 3-2
1-2-2. VCO (Record Current Frequency) Adjustment 3-2
1-3. Tuner/IF Circuit 3-2
1-3-1. AFC Adjustment 3-2
1-3-2. RF AGC Adjustment 3-3
1-3-3. SIF Adjustment 3-3
2. 8mm Circuit Adjustment 3-4
2-1. Servo Circuit 3-4
2-1-1. PG Adjustment 3-4
2-2. Y/C Circuit 3-4
2-2-1. Playback Output Level Adjustment 3-4
2-2-2. Color VCO Adjustment 3-4
2-3. Audio Circuit 3-5
2-3-1. VCO Adjustment 3-5
2-3-2. Deviation (L) Adjustment 3-5
2-3-3. Deviation (R) and Matrix Adjustment 3-5
BLOCK DIAGRAMS 3-7
1. VHS Block Diagrams 3-7
1-1. Power Block Diagram 3-7
1-2. Pre-Amp Block Diagram 3-9
1-3. Main System (Servo, Syscon) Block Diagram 3-11
1-4. Y/C Block Diagram 3-14
1-5. Audio Block Diagram 3-17
1-6. Timer Block Diagram 3-19
1-7. Tuner/IF Block Diagram 3-21
1-8. In/Out & Function OSD Block Diagram 3-23
2. 8mm Block Diagrams 3-25
2-1. Main System (Servo, Syscon) Block Diagram 3-25
2-2. Audio Block Diagram 3-28
2-3. Pre-Amp Block Diagram 3-28
2-4. Y/C Block Diagram 3-30
CIRCUIT DIAGRAMS 3-31
1. VHS Circuit Diagrams 3-31
1-1. Power Circuit Diagram 3-31
1-2. Main System (Servo, Syscon) Circuit Diagram 3-35
1-3. Y/C Circuit Diagram 3-39
1-4. Timer/Key Function Circuit Diagram 3-45
1-5. Audio Circuit Diagram 3-47
1-6. Tuner/IF Circuit Diagram 3-51
1-7. Scart In/Out & Function OSD Circuit Diagram 3-55
1-8. Pre-Amp Circuit Diagram 3-59
2. 8mm Circuit Diagrams 3-65
2-1. Main System (Servo, Syscon) Circuit Diagram 3-65

2-2. Y/C Circuit Diagram 3-69
2-3. Audio Circuit Diagram 3-75
2-4. Pre-Amp Circuit Diagram 3-79
3. Connection Diagram 3-81
PRINTED CIRCUIT BOARD DIAGRAMS 3-83
1. VHS Printed Circuit Board 3-83
1-1. Main P.C.Board 3-83
1-2. Power P.C.Board 3-87
1-3. Pre-Amp P.C.Board 3-88
1-4. Timer (I) P.C.Board 3-87
1-5. Deck Junction P.C.Board 3-89
1-6. Scart In/Out P.C.Board 3-89
2. 8mm Printed Circuit Board 3-91
2-1. Main P.C.Board 3-91
2-2. Timer (II) P.C.Board 3-92
2-3. Pre-Amp P.C.Board 3-93
2-4. Deck Junction P.C.Board 3-95

SECTION 4 MECHANISM

SECTION 4-1 VHS DECK MECHANISM

FRONT LOADING MECHANISM DISASSEMBLY
• Front Loading Mechanism Parts Location 4-3
1. Front Loading Mechanism Assembly 4-4
2. PCB Assembly 4-5
2-1. PCB Assembly (R) 4-5
2-2. PCB Assembly (L) 4-5
3. Top Plate 4-5
4. Carrier Bracket Assembly 4-6
4-1. Carrier Bracket Assembly 4-6
4-2. Cassette Opener 4-6
4-3. Rid Opener 4-6
4-4. Detect Lever and Detect Spring 4-6
4-5. Support Bracket Assembly 4-7
4-6. Carrier Bracket Assembly 4-7
5. Cassette Guide 4-7
6. Bracket Assembly Side 4-8
7. Bracket Assembly (L), (R) 4-8
8. Door Opener 4-8
9. Drive Gear Assembly 4-8
9-1. Drive Gear Assembly 4-8
9-2. Cushion Spring 4-8
9-3. Cap-D 4-8
9-4. Spring C.C 4-8
9-5. Gear C 4-8
9-6. Gear R 4-9
9-7. Spring R 4-9
9-8. Gear L 4-9
9-9. Spring L 4-9
9-10. Switch Lever 4-9
DECK MECHANISM DISASSEMBLY
• Deck Mechanism Parts Location 4-10
1. Auto Head Cleaner Assembly 4-11
2. Drum and Drum Base Assembly 4-11
3. Drum Assembly 4-11
3-1. Drum Sub and Motor Assembly 4-11
3-2. Upper and Lower Drum Assembly 4-12
4. A/C Head Assembly 4-12
5. Pinch Lever Assembly 4-12
6. Loading Motor Assembly 4-13
7. Take Up Lever 4-13
8. Take Up Arm Assembly 4-13
9. P4 Assembly 4-14
10. Pinch Gear 4-14
11. Full Erase Head Assembly 4-14
12. P1 Assembly 4-15
13. Tension Arm Assembly 4-15
14. Supply Soft, Supply Main, Take Up Soft and Take Up Main Brake Assembly 4-15
15. Bracket F/R Assembly 4-15
16. Supply Reel Assembly 4-16
17. Take Up Reel Assembly 4-16
18. Idler Gear (A), (B) 4-16
19. Pulley Gear Assembly 4-16
20. Bracket Bottom Assembly 4-16
21. Junction PCB Assembly 4-16
22. Capstan Motor/Brake Assembly 4-17
23. Function Plate 4-17
24. Ratchet Lever Assembly 4-18
25. Cam Gear, Rack T, Rack F.L 4-18
26. PC Gear 4-19
27. P2 and P3 Slant Assembly 4-19
28. Loading Gear Assembly 4-19
29. Tension Lever Assembly 4-20
30. Clutch Gear Assembly 4-20
MECHANISM ADJUSTMENT
• Tools and Fixtures for Deck 4-21
1. Mechanism State Switch (Mode Switch) Check 4-22
2. Preparation for Adjustment (To set VCR to the Loading State without inserting a cassette) ..4-23
3. Tension post position and Tension Adjustment 4-24
4. Checking Torque 4-25
5. Guide Roller Height Adjustment 4-27

6. Audio/Control (A/C) Head Adjustment 4-29
7. X-Value Adjustment.....4-30
8. Adjustment after Replacing Drum Assembly (Video Heads) 4-31
9. Check of Tape Travel after Reassembling Deck Assembly 4-30
9-1. Check Audio and RF Locking Time during Playback after CUE or REV 4-30
9-2. Check the coincidence of both Audio and Video Sync. (Lip sync.) 4-31
9-3. Check the occurance of tape curl and Jame..4-31
9-4. Check the adjustment state of Take-Up Guide 4-31
10. Maintenance/Inspection Procedure 4-32
MECHANISM TROUBLESHOOTING GUIDE
1. Deck Mechanism 4-35
2. Front Loading Mechanism 4-39
EXPLODED VIEWS
1. Moving Mechanism Section (I) 4-41
2. Moving Mechanism Section (II) 4-43
3. Front Loading Mechanism Section 4-45

SECTION 4-2
8mm DECK MECHANISM

Periodical Check and Maintenance 4-47
1. Rotary Drum Assembly Cleaning 4-47
2. Tape Loading Course Cleaning.....4-47
3. Drive System Cleaning 4-47
4. Maintenance Time Table 4-48
Deck Mechanism Disassembly 4-49
1. Housing Ass'y Disassembly 4-49
2. DC Motor (Capstan motor) Ass'y 4-49
3. Pinch Arm Ass'y and Pinch Lever Ass'y 4-50
4. Take up Arm Ass'y 4-51
5. Mode Lever Ass'y and Take up Lever Ass'y .4-52
6. Soft Brake Ass'y and T/Band Protect.....4-52
7. Tension Regulator Ass'y and Slant Roller Arm Ass'y.....4-53
8. Tension Regulator FWD Position and Back Tension Adjustments.....4-54
9. Worm Gear Ass'y Middle Gear, Trains Gear Ass'y, Loading Motor Ass'y and Bracket Ass'y 4-55
10. Loading Base Ass'y, Mode Gear A'ssy and Eject Lever Ass'y.....4-56
11. Gear Loading Ass'y (S), (T), Slant Base Ass'y (S), (T), Cam Gear and Lever Drive Ass'y.....4-58
12. Drum Base Ass'y and Interia Roller Ass'y.....4-60
13. Brake Clutch, Reel Ass'y (S), Reel Ass'y (T), Sensor Bracket, Idler Gear Ass'y and Cam Spacer.....4-62
14. Brake Reel Ass'y, Lever Brake Ass'y, Timing Belt, Idler Belt, Drive Gear Ass'y, Conversion Gear Ass'y 4-63
15. Drum Ass'y Disassembly 4-63
16. Drum Disassembly.....4-64
17. PCB Ass'y Deck.....4-65
Deck Mechanism Adjustment 4-66
1. Deck Loading System Lay-Out 4-66
2. Preparations.....4-66
3. Loading Post First Height Adjustment.....4-66
4. Tension Arm Position and Back Tension Adjustment 4-66
5. Reel Torque Check 4-67
6. Tape Path Adjustment.....4-68
Exploded Views.....4-71
1. Cassette Housing Section.....4-71
2. Chassis Mechanism Section.....4-73

SECTION 5
REPLACEMENT PARTS LIST

1. Mechanical Section.....5-1
1-1. VHS Mechanism 5-1
1-2. 8mm Mechanism.....5-5
2. Cabinet & Main frame Section 5-7
3. Packing Accessory Section.....5-8
4. Remote Control Section.....5-8
5. Fixture Section 5-8
6. Electrical Section 5-9

SECTION 1 SUMMARY

KEY TO ABBREVIATIONS

A	AC	:Alternating Current
	ACC	:Automatic Color Control
	ACSS	:Automatic Channel Setting System
	ADJ	:Adjust
	A/E	:Audio Erase
	AFC	:Automatic Frequency Control
	AFT	:Automatic Fine Tuning
	AGC	:Automatic Gain Control
	A.H.SW	:Audio Head Switch
	ALC	:Automatic Level Control
	AM	:Amplitude Modulation
	AMP	:Amplifier
	ANT	:Antenna
	APC	:Automatic Phase Control
	ASS'Y	:Assembly
	AUX	:Auxiliary
B	B	:Base
	BGP	:Burst Gate Pulse
	BPF	:Bandpass Filter
	BS	:Brodcasting Satellite
	BW or B/W	:Black and White
C	C	:Capacitor, Chroma, Collector
	CAN	:Cancel
	CAP	:Capstan
	CAP.BRK	:Capstan Brake
	CAP.RVS	:Capstan Reverse
	CATV	:Cable Television
	CBA	:Circuit Board Assembly
	CCD	:Charge Coupled Device
	C.CTL	:Chro Control, Capstan Control
	CFG	:Capstan Frequency Generator
	CHROMA	:Chrominance
	CNR	:Chroma Noise Reduction
	COMB	:Combination Comb Filter
	COMP	:Comparator Composite Compensation
	CONV	:Converter
	C.ROT SW	:Color Rotary Switch
	CS	:Chip Select
	C.SYNC	:Composite Synchronization
	CTL DIV	:Control Divide
	CUR	:Current
	CYL	:Cylinder
D	D	:Drum, Digital, Diode, Drain
	D.ADJ	:Drum Adjust
	DC	:Direct Current
	D.CTL	:Drum Control
	DEMOD	:Demodulator
	DET	:Detect
	DEV	:Deviation
	DHP	:Double High Pass
	DIGITRON	:Digital Display Tube
	DL	:Delay Line
	DOC	:Drop Out Compensator
	DUB	:Dubbing
	D.V SYNC	:Dummy Vertical Synchronization
E	E	:Emitter
	EE	:Electric to Electric
	EMPH	:Emphasis
	ENA	:Enable
	ENV	:Envelope
	EP	:Extended Play
	EQ	:Equalizer
	EXP	:Expander
F	F	:Fuse
	FB	:Feed Back
	FBC	:Feed Back Clamp
	FE	:Full Erase
	FG	:Frequency Generator
	FL	:Filter
	FM	:Frequency Modulation
	F/R	:Forward/Reverse
	FS	:Frequency Synthesizer
	FSC	:Subcarrier Frequency
	F/V	:Frequency Voltage
G	GEN	:Generator
H	H	:High, Horizontal
I	IC	:Intergrated Circuit
	IF	:Intermediate Frequency
	INS	:Insert
L	L	:Low, Left, Coil
	LD	:Loading
	LD VTG CTL	:Loading Voltage Control
	LECHA	:Letter Character
	L.M	:Level Meter
	LP	:Long Play
	LPF	:Low Pass Filter
M	MAX	:Maximum
	MD	:Modulator
	MECHA.CTL	:Mechanism Control
	MIC	:Microphone
	MIN	:Minimum
	MIX	:Mixer, Mixing
	M.M.	:Mono Multi Vibrator
	MMV	:Monostable Multivibrator
	MOD	:Modulation, Modulator
	MODEN	:Modulation-Demodulator
	MPX	:Multiplex
N	NR	:Noise Reduction
O	OSC	:Oscillator
	OSD	:On Screen Display
P	PB	:Playback
	PCB	:Printed Circuit Board
	P.CTL	:Power Control
	PER-AMP	:Preamplifier
	P.F	:Power Failure
	PG	:Pulse Generator
	PLL	:Phase Locked Loop
	PREM.DET	:Premire Detect
	P-P	:Peak to Peak
	PS	:Phase Shift
	PWM	:Pulse Width Modulation
	PWR CTL	:Power Control
Q	Q	:Transistor
	QH	:Quasi Horizontal
	QSR	:Quick Set Record
	QTR	:Quick Timer Record
	QV	:Quasi Vertical
R	R	:Resistor, Right
	RE(or RC)	:Remocon, Receiver
	REC	:Recording
	REC S.'H'	:Record Start 'Hight'
	REF	:Reference
	REG	:Regulated, Regulator
	REMOCON	:Remote Control(unit)
	RF	:Radio Frequency
	R/P	:Record/Playback
	RTC	:Reel Time Counter
S	S	:Serial
	S.ACCEL	:Slow Accel
	SAOP	:Second Audio Program
	SC	:Scart, Simulcast
	S.DET	:Secam Detect
	SH	:Shift
	SHARP	:Sharpness
	SIF	:Sound Intermediate Frequency
	SLD	:Side Locking
	S/N	:Signal to Noise Ratio
	SP	:Standard Play
	ST	:Stereo
	SUB	:Subtract, Subcarrier
	SW or S/W	:Switch
	SYNC	:Synchronization
	SYSCON	:System Control
T	T	:Coil
	TP	:Test Point
	TR	:Transistor
	TRK	:Tracking
	TRANS	:Transformer
	TU	:Tuner, Take-Up
U	UHF	:Ultra Hight Frequency
	UNREG	:Unregulated
V	V	:Volte, Vertical, Video
	VA	:Voltage Alive
	VCO	:Voltage Controlled Oscillator
	VGC	:Voltage Gain Control
	VHF	:Very High Frequency
	V.H.SW	:Video Head Switch
	VISS	:VHS Index Search System
	VPS	:Video Program System
	VR	:Variable Resistor or Volume
	V-SYNC	:Vertical Synchronization
	VTG	:Voltage
	VV	:Video to Video
	VXO	:Voltage X-tal Oscillator
W	W	:Watt
	WHT	:White
	W/O	:With Out
X	X-TAL	:Crystal
Y	Y/C	:Luminance/Chrominance
	YNR	:Luminance Noise Reduction
Z	ZD	:Zener Diode

IMPORTANT SAFETY PRECAUTIONS

Prior to shipment from the factory, the products are strictly inspected to conform with the recognized product safety and electrical codes of the countries in which they are to be sold. However, in order to maintain such compliance, it is equally important to implement the following precautions when a set is being serviced.

• Precautions during Servicing

1. Locations requiring special caution are denoted by labels and inscriptions on the cabinet, chassis and certain parts of the product. When performing service, be sure to read and comply with these and other cautionary notices appearing in the operation and service manuals.

2. Parts identified by the ⚠ symbol and shaded (■) parts are critical for safety.
   Replace only with specified part numbers.
   Note: Parts in this category also include those specified to comply with X-ray emission standards for products using cathode ray tubes and those specified for compliance with various regulations regarding spurious radiation emission.

3. Use Specified internal wiring. Note especially:
   1) Wires covered with PVC tubing
   2) Double insulated wires
   3) High voltage leads

4. Use specified insulating materials for hazardous live parts. Note especially:
   1) Insulation Tape
   2) PVC tubing
   3) Spacers
   4) Insulation sheets for transistor

5. When replacing AC primary side components (transformers, power cords, noise blocking capacitors, etc.) wrap ends of wires securely about the terminals before soldering.(Fig. 1)

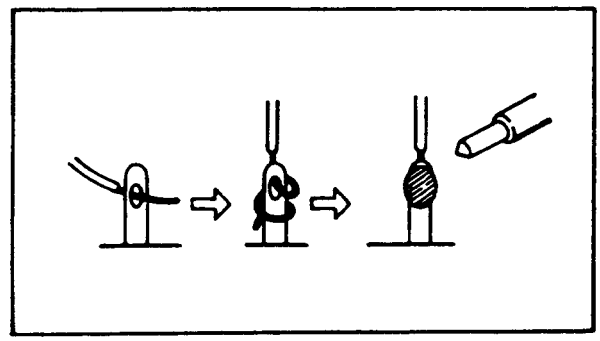

Fig. 1

6. Observe that wires do not contact heat producing parts (heatsinks, oxide metal film resistors, fusible resistors, etc.)

7. Check that replaced wires do not contact sharp edged or pointed parts.

8. When a power cord has been replaced, check that 10-15Kg of force in any direction will not loosen it.(Fig. 2)

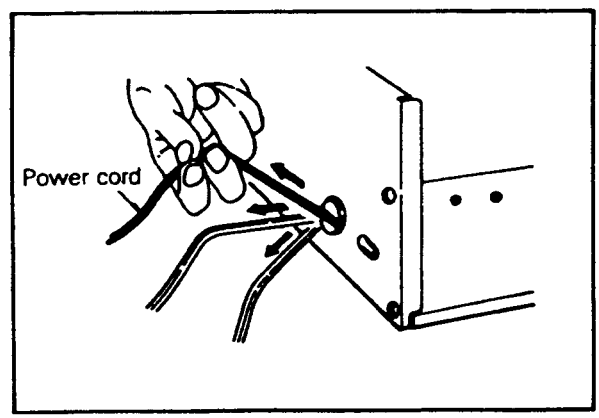

Fig. 2

9. Also check areas surrounding repaired locations.

10. Products using cathode ray tubes (CRTs)
    In regard to such products, the cathode ray tubes themselves, the high voltage circuits, and related circuits are specified for compliance with recognized codes pertaining to X-ray emission. Consequently, when servicing these products, replace the cathode ray tubes and other parts with only the parts specified. Under no circumstances attempt to modify these circuits. Unauthorized modification can increase the high voltage value and cause X-ray emission from the cathode ray tube.

SAFETY CHECK AFTER SERVICING

Examine the area surrounding the repaired location for damage or deterioration. Observe that screws, parts and wires have been returned to original positions. Afterwards, perform the following tests and confirm the specified values in order to verify compliance with safety standards.

• Insulation resistance test

Confirm the specified insulation resistance or greater between power cord plug prongs and externally exposed parts of the set (RF terminals, antenna terminals, video and audio input and output terminals, microphone jacks, earphone jacks, etc.). See table below.

• Dielectric strength test

Confirm specified dielectric strength or greater between power cord plug prongs and exposed accessible parts of the set(RF terminals, antenna terminals, video and audio input and output terminals, microphone jacks, earphone jacks, etc.). See table below.

• Clearance distance

When replacing primary circuit components, confirm specified clearance distance (d), (d') between soldered terminals, and between terminals and surrounding metallic parts. See table below.

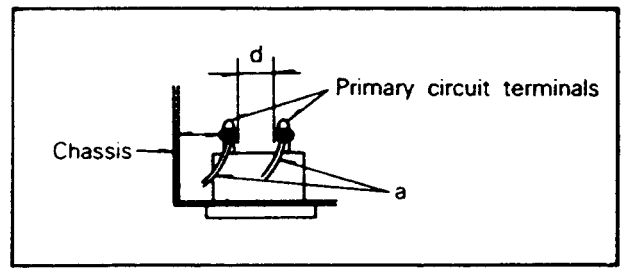

Fig. 3

Table 1:Ratings for selected areas

AC Line Voltage	Region	Insulation Resistance	Dielectric Strength	Clearance Distance(d),(d)
*110 to 130 V 200 to 240 V	Europe Australia	≧10 MΩ/500 V DC	4kV 1 minute	≧6mm(d) ≧8mm(d) (a Power cord)

*Class II model only.

Note. This table is unofficial and for reference only. Be sure to confirm the precise values for your particular country and locality.

• Leakage Current test

Confirm specified or lower leakage current between B(earth ground, power cord plug prongs) and externally exposed accessible parts (RF terminals, antenna terminals, video and audio input and output terminals, microphone jacks, earphone jacks, etc.)

Measuring Method: (Power ON)
Insert load Z between B(earth ground, power cord plug prongs) and exposed accessible parts. Use an AC voltmeter to measure across both terminals of load Z. See figure and following table.

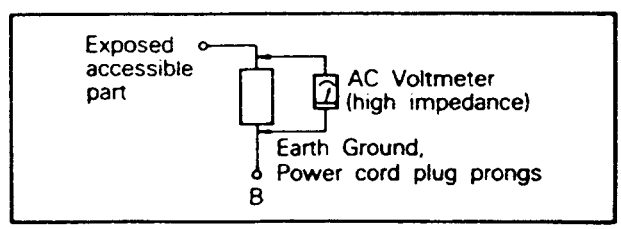

Fig. 4

Table 2:Leakage current ratings for selected areas

AC Line Voltage	Region	Load Z	Leakage Current(i)	Earth Ground (B) to:
100 to 130 V	Europe	2kΩ	i≦0.7m A peak i≦2m A dc	Antenna earth terminals
200 to 240 V	Australia	50kΩ	i≦0.7m A peak i≦2m A dc	Other terminals

Note. This table is unofficial and for reference only. Be sure to confirm the precise values for your particular country and locality.

INTRODUCTION

This service manual provides a variety of service information. It contains the mechanical structure of the Double Deck Video Cassette Recorder together with mechanical adjustments and the electronic circuits in schematic form. This Double Deck VCR was manufactured and assembled under our strict quality control standards and meets or exceeds industry specifications and standards.

FEATURES

- the VHS and Hi 8mm system with HQ-picture technology for extraordinary picture sharpness and high resolution.
- Hi-Fi stereo for excellent sound quality including a NICAM sound decoder.
- the channels will be preset and memorized automatically.
- automatic power and playback.
- four VHS video heads for a clear still image and a variable slow motion.
- three Hi 8mm video heads for Hi 8mm playback, standard 8mm playback also possible.
- assemble editing from 8 mm tape to VHS tape.
- the easy searching of your recordings by automatic and manual index marking, which can also be erased.
- the blank search system for searching the unrecorded portion of the tapes.
- the quick mechanism for fast tape function transitions.
- the long play VHS recording and playback facility.
- the real time tape counter and the VHS remaining tape time display.
- eight programme timer, programmable up to one year in advance, can be set for daily or weekly recording.
- the on-screen display of many functions e.g. the stored timer programmes.
- and many more, like additional Euro-AV sockets, audio dubbing, child lock, immediate recording timer, and title generator.
- built-in ShowView Programming : Optional Function
  ShowView is a trademark applied for by Gemstar Development Corp.
  ShowView system is manufactured under license from Gemstar Development Corporation.

SPECIFICATIONS

General		
Power supply :		AC 230V (±10%), 50Hz
Power consumption :		Approx. 35W
Cabinet size(W × H × D) :		430 × 99 × 390mm
Weight :		Approx. 8.2Kg
Operating temperature :		5° C to 35° C surrounding temperature
Operating humidity :		35-80%
8 mm Player section		
Format :		8 mm PAL Standard
Heads :		3 video heads
Tape speed :	(SP)	20.05 mm/sec.
	(LP)	10.025 mm/sec.
Tape width :		8 mm
Video output :		1 Vpp 75 ohm unbalanced
Audio output :		0 dBm, less than 1 Kohm
VHS Recorder section		
Format :		VHS PAL Standard
Heads :		4 video heads
Tape speed :	(SP)	23.39 mm/sec.
	(LP)	11.635 mm/sec.
Tape width :		12.7 mm
Video :		PAL B/G
Recording/playback time :		300 min. (LP : 600 min.) with E-300
Aerial input :		PAL : VHF 01-11 UHF 21-69 CATV S01-S41 HYPER 71-73
RF output :		UHF channels 32~40 (Variable)
Video input :		1 Vpp 75 ohm unbalanced
Video output :		1 Vpp 75 ohm unbalanced
S/N ratio (video) :		45dB nominal
Audio input :		0dBm, more than 50 Kohm
Audio output :		0dBm, less than 1 Kohm
Audio track :		Mono track & Hi-Fi tracks
S/N ratio (audio) :		NORMAL : >45dB/Hi-Fi : >68dB (JIS A FILTER)
Audio frequency range :		NORMAL : 100Hz-10kHz (-6/+3) Hi-Fi : 20Hz-20kHz
Audio dynamic range :		Hi-Fi Audio : >75dB (JIS A FILTER)

* Designs and specifications are subject to change without notice.

LOCATION OF CUSTOMER CONTROLS

FRONT

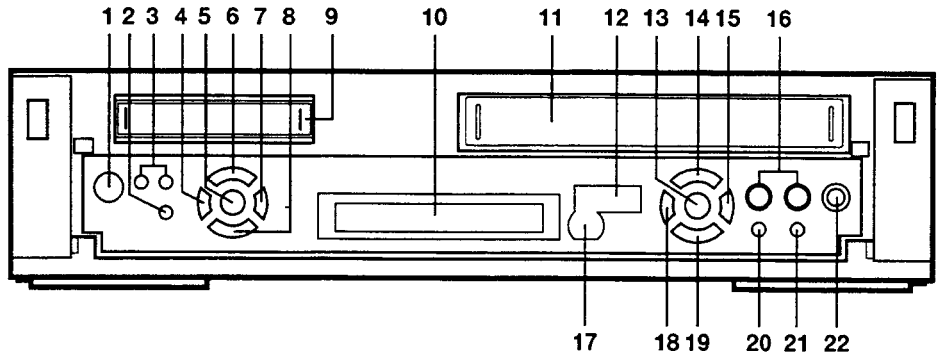

REAR

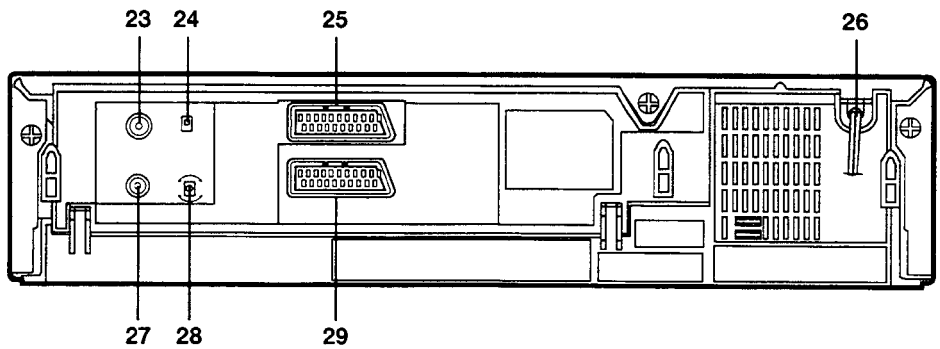

1. OPERATE ON/OFF BUTTON
2. OTC BUTTON
3. PR/TRK (-/+) BUTTONS

8 mm Player section

4. REWIND/REVIEW BUTTON
5. STOP/EJECT BUTTON
6. PLAY BUTTON
7. FAST FORWARD/CUE BUTTON
8. STILL BUTTON
9. CASSETTE COMPARTMENT
10. MULTI FUNCTION DISPLAY (8mm & VHS)

VHS Recorder section

11. CASSETTE COMPARTMENT
12. AUDIO LEVEL METER
13. STOP/EJECT BUTTON
14. PLAY (×2) BUTTON
15. FAST FORWARD/CUE BUTTON
16. AUDIO RECORDING LEVEL CONTROLS (L/R)
17. REMOTE CONTROL SENSOR (8mm & VHS)
18. REWIND/REVIEW BUTTON
19. P/STILL BUTTON
20. RECORD BUTTON
21. AUDIO DUBBING BUTTON
22. MIC IN JACK
23. AERIAL INPUT SOCKET
24. TPSG ON/OFF SWITCH
25. EURO-AV 1 SOCKET
26. MAINS LEAD
27. RF OUTPUT
28. VIDEO CHANNEL CONTROL
29. EURO-AV 2 SOCKET

REMOTE CONTROL

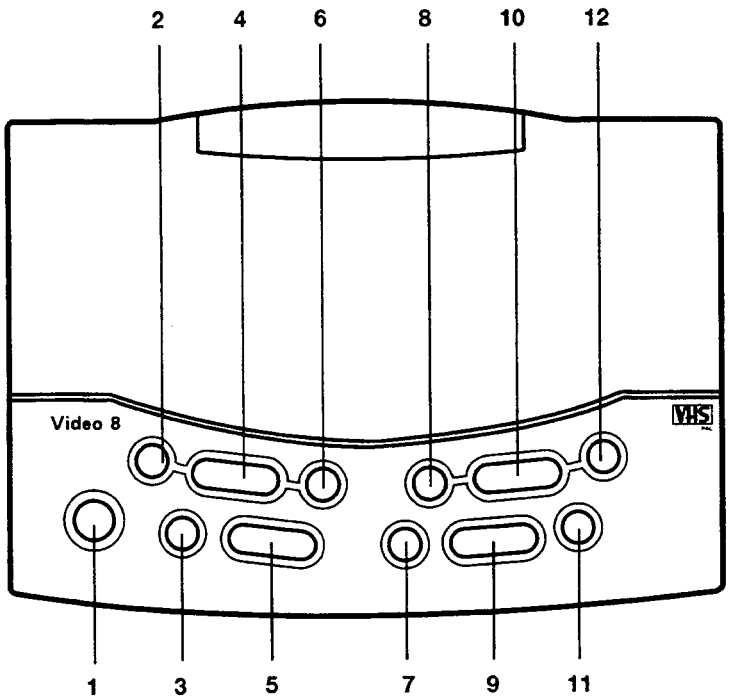

1. OPERATE ON/OFF BUTTON

8 mm Player section

2. REWIND/REVIEW BUTTON
3. STILL BUTTON
4. PLAY BUTTON
5. STOP BUTTON
6. FAST FORWARD/CUE BUTTON

VHS Recorder section

7. P/STILL BUTTON
8. REWIND/REVIEW BUTTON
9. STOP BUTTON
10. PLAY (×2) BUTTON
11. FRAME ADVANCE BUTTON
12. FAST FORWARD/CUE BUTTON

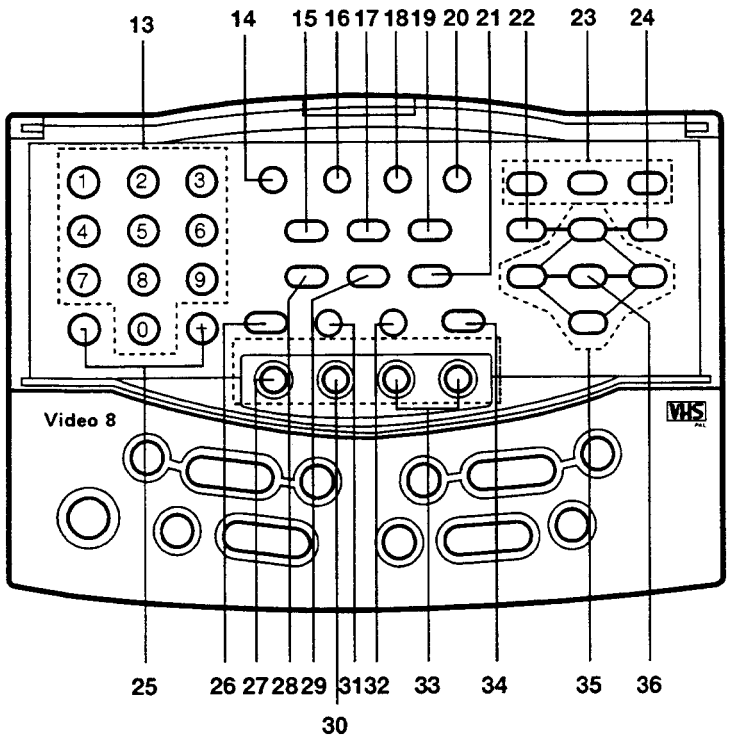

13. NUMBER BUTTONS
14. TAPE SPEED SELECT BUTTON (LP)
15. MIC MIX BUTTON
16. TV/VCR BUTTON : *
17. CHILD LOCK BUTTON
18. MONITOR BUTTON
19. TU/AV BUTTON
20. SHOWVIEW BUTTON : *
21. REC/QSR BUTTON
22. MENU BUTTON
23. VISS BUTTONS
24. CLEAR BUTTON
25. PR/TRK (+/-) BUTTONS
26. AUTO TRACKING BUTTON
27. EDIT BUTTON
28. B.SEARCH BUTTON
29. AUDIO DUBBING BUTTON
30. OTC BUTTON
31. 8mm RESET BUTTON
32. VHS RESET BUTTON
33. SLOW BUTTONS
34. RESET BUTTON
35. CURSOR BUTTONS
36. OK BUTTON

※ * : Optional Function

SECTION 2 CABINET & MAIN FRAME
SERVICE FIXTURE CONNECTING METHOD

1. SVC FIXTURE Connecting Method

A. FIXTURE Cable ① Connecting Method.

a) Connect the FIXTURE Cable ① between Main C. B.A and Junction C.B.A. (P2J01, P2J02, P2J03)

b) At this time, should be in the left side " ◄ LEFT" mark on the P.C.B of the FIXTURE Cable ①. (See Fig. 2-a, 2-c)

c) Connect the connector of "MAIN" mark of FIXTURE Cable ① with the Main C.B.A and the connector of "JUNCTION" mark with the Junction C.B.A. (See Fig. 2-a, 2-c)

B. FIXTURE Cable ② Connecting Method.

a) Connect the FIXTURE Cable ② between Main C. B.A and Pre-Amp Ass'y. (P3901=P9301, P3902=P9302)

b) At this time, should be in the left side " ◄ LEFT" mark on the P.C.B of the FIXTURE Cable ②. (See Fig 2-a, 2-b)

c) Connect the connector of "MAIN" mark of FIXTURE Cable ② with the Main C.B.A and the connector of "JUNCTION" mark with the Pre-Amp Ass'y. (See Fig. 2-a, 2-b)

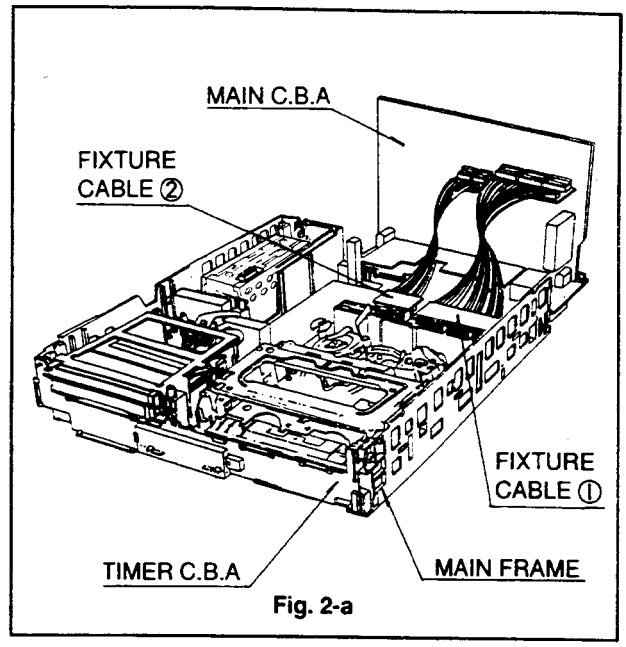

Fig. 2-a

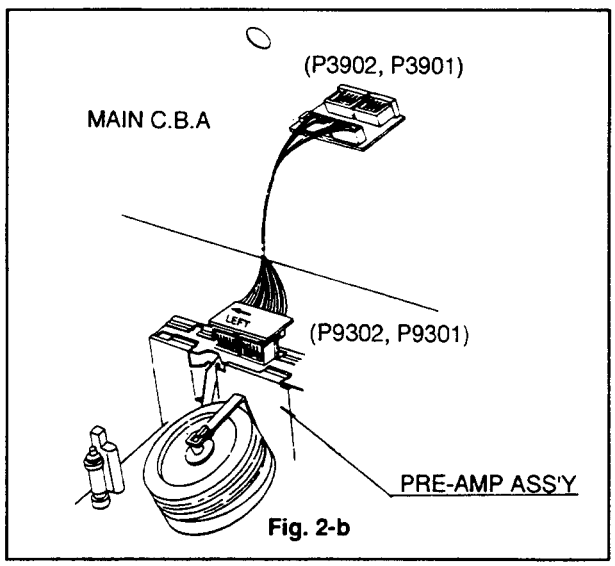

Fig. 2-b

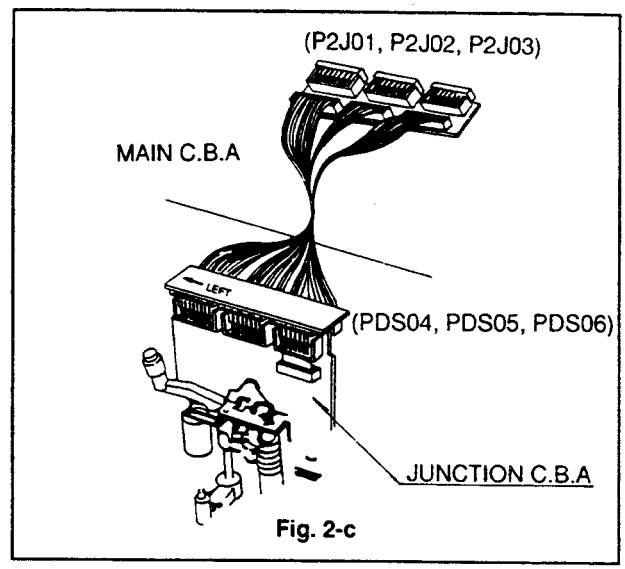

Fig. 2-c

2. Electrical Service Fixture List

A. Fixture Cable ①.

Parts No.: 232-972A (Optional Parts)

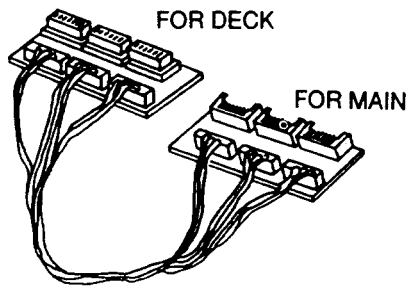

B. Fixture Cable ②.

Parts No.: 515-789A (Optional Parts)

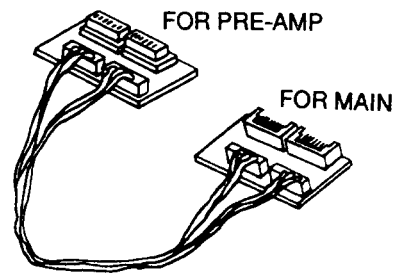

CABINET DISASSEMBLY

1. Top Case

A. Release 7 screws (1).
B. Hold the back of Top Case and lift it up slightly backward to remove it.

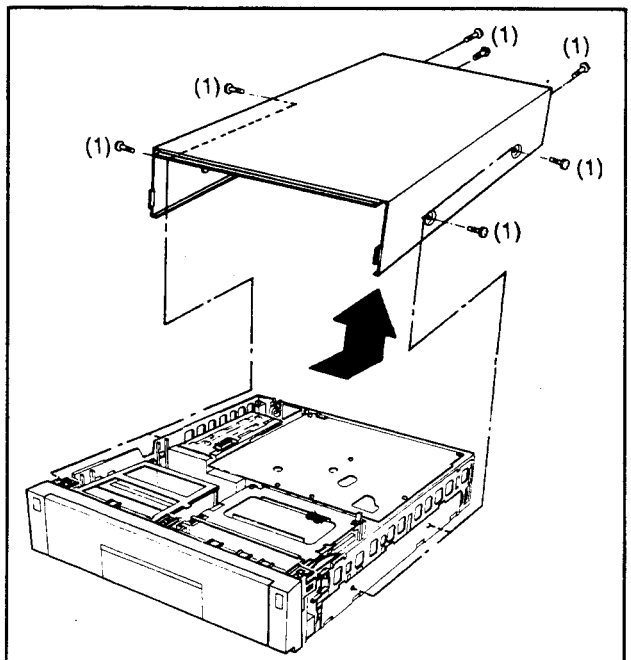

Fig. 2-1

2. Bottom Cover

A. Release 9 screws (2) to remove the Bottom Cover.

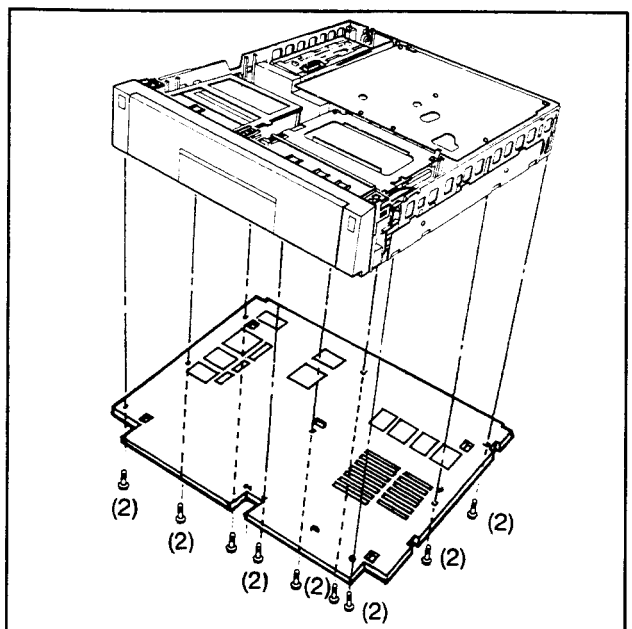

Fig. 2-2

3. Front Panel

A. Release 1 screws (3).
B. Remove the stoppers on the top of Front Panel.
C. Remove the stoppers on the bottom side Front Panel.

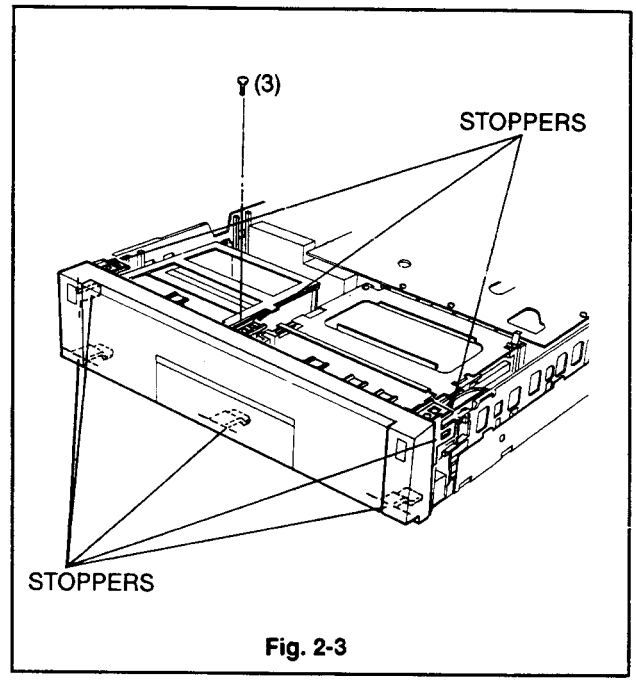

Fig. 2-3

* Caution

When reassemble the Front panel, assemble it in condition of inserting the Door Cassette inside, as shown in Fig.2-4

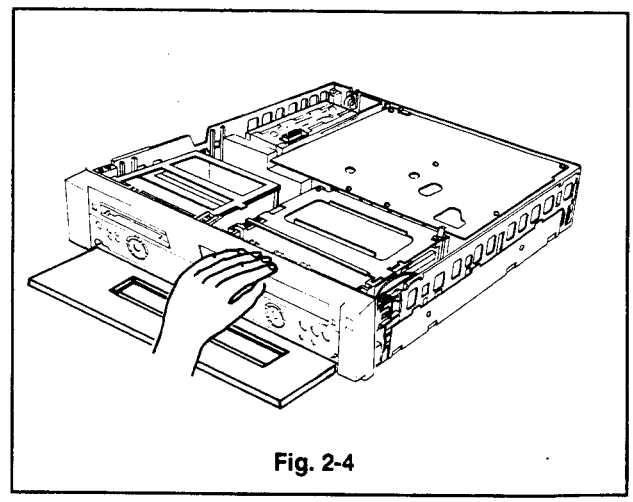

Fig. 2-4

CIRCUIT BOARD DISASSEMBLY

1.Circuit Board Arrangement

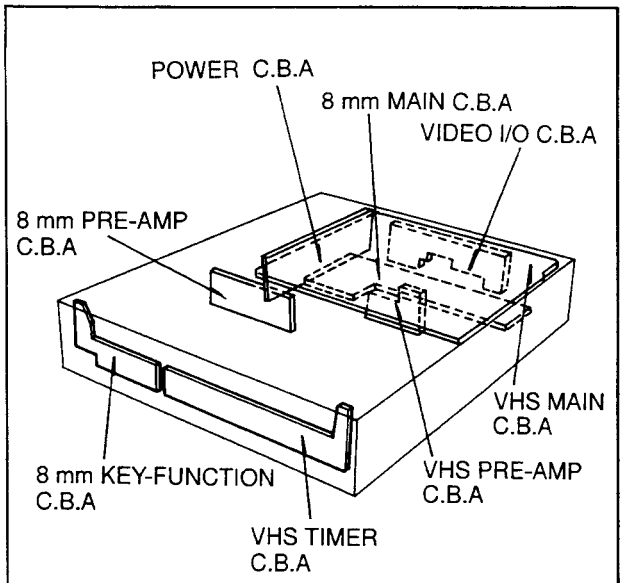

Fig. 2-5

2. VHS Main Circuit Board

A. Release 4 screws (4).
B. Remove the Main C.B.A in the direction of arrow (A).

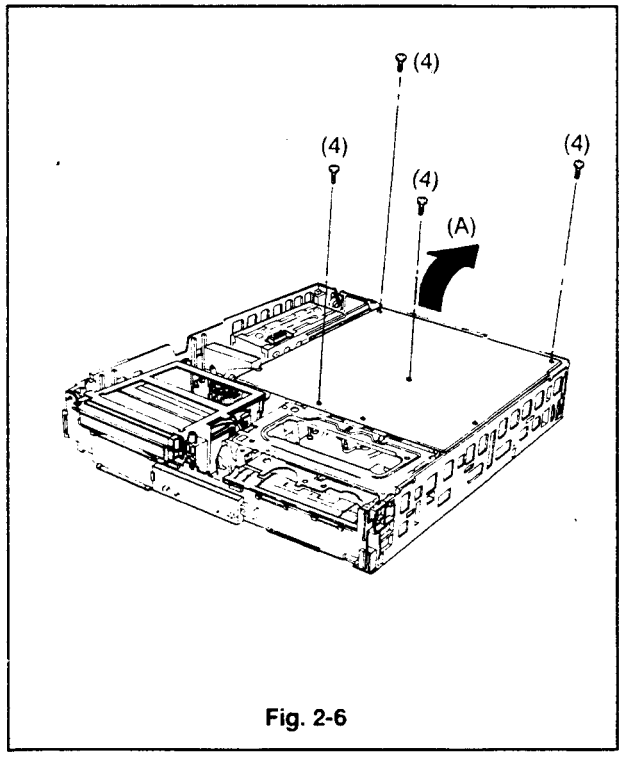

Fig. 2-6

3. Power Circuit Board

A. Remove the Bottom Cover. (Fig. 2-2)
B. Release 2 screws (5).
C. Remove the Power C.B.A in the direction of arrow (B).

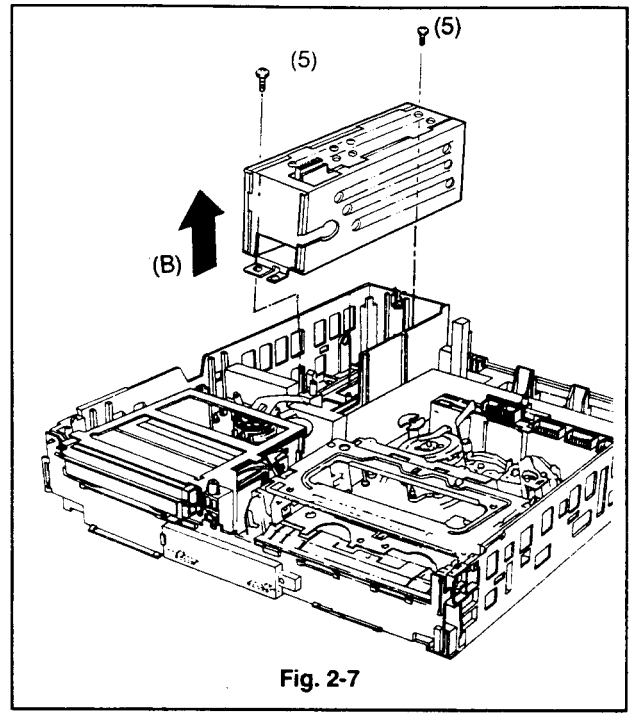

Fig. 2-7

4. 8mm Main Circuit Board

A. Release 2 screws (6).
B. Remove the 8mm Main C.B.A in the direction arrow (C).

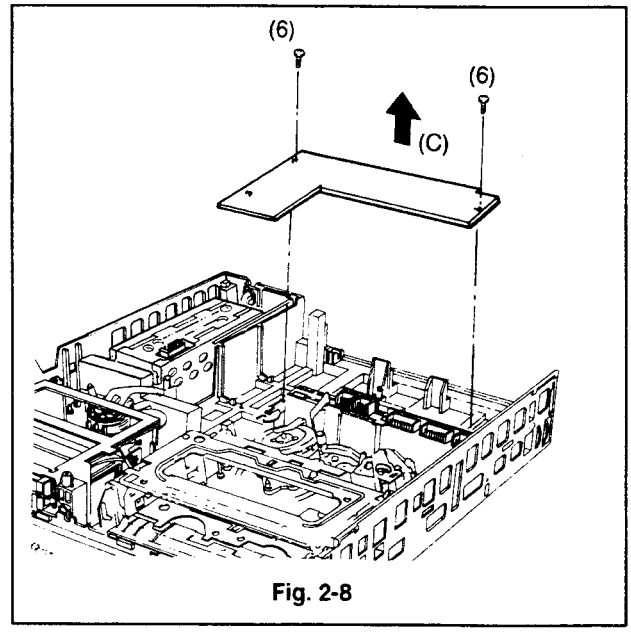

Fig. 2-8

5. 8mm/VHS Pre-Amp Circuit Board

A. Release 2 screws (7).
B. Remove the 8mm Pre-Amp C.B.A.
C. Release 2 screws (8).
D. Remove the VHS Pre-Amp C.B.A.

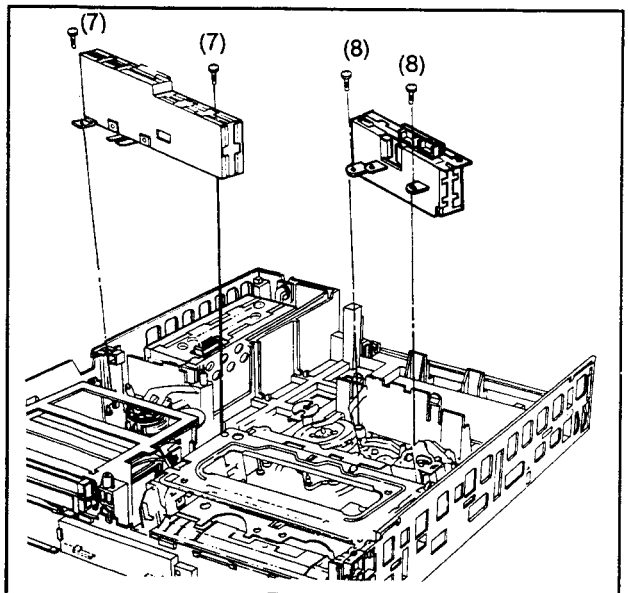

Fig. 2-9

6. 8 mm/VHS Key Function Circuit Board

A. Release 1 screw (9).
B. Release 9 stoppers in the direction arrow (D).
C. Remove the 8mm/VHS Key Function C.B.A in the direction arrow (E).

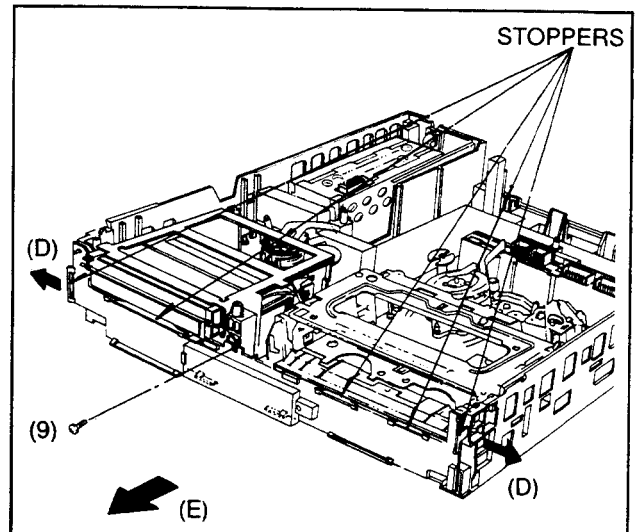

Fig. 2-10

• Cabinet & Main Frame Section Replacement Parts List

RUN DATE : 95.09.27
NSP: Not Service Part

S	AL	LOCA.NO	PART NO(GS)	DESCRIPTION	SPECIFICATION	REMARKS
				ASSEMBLY PARTS SECTION		
		A40	315-314N	FRAME	ASSY MAIN	NSP
		A41	3501R-0249A	BOARD ASSY	KEYBOARD 2NDDD1S	
		A42	3501R-0248A	BOARD ASSY	TIMER 2NDDD1S	
		A43	258-722K	PANEL	ASSY FRONT	
		A44	3501R-0247B	BOARD ASSY	SMPS	
		A45	501-522A	MODULE	PRE AMP ASSY	
		A46	3501R-0245D	BOARD ASSY	MAIN	
		A47	3501R-0251A	BOARD ASSY	8MM PRE-AMP	
		A48	3501R-0246A	BOARD ASSY	8MM MAIN	
				PARTS SECTION		
		250	217-472C	CASE	TOP	
		251	321-526A	BRACKET	HOUSING	
		260	315-300B	FRAME	MAIN	NSP
		262	257-061A	PLATE	GND (FTZ)	NSP
		263	324-976A	HOLDER	PWB	NSP
		275	324-872A	HOLDER	DIGITRON	
		278	273-116A	KNOB	TRACKING	
		280	258-717E	PANEL	FRONT	NSP
		282	220-075F	COVER	ASSY DOOR	
		283	226-104D	DOOR	CST	
		284	442-469A	SPRING	DOOR	
		288	524-013A	MAGNET	ASSY DOOR	
		289	321-718A	BRACKET	ASSY COVER DOOR	
		290	321-719A	BRACKET	ASSY DAMPER	
		291	435-465B	GEAR	ASSY DAMPER(T;60)	
		300	681-951A	CORD	H03VVH2-F 2X0.75MM LP21R/PE221	
		320	258-596G	PANEL	ASSY DISTRIBUTOR	
		321	257-006A	PLATE	BOTTOM GROUND	
		330	221-834A	COVER	BOTTOM	
		340	226-064J	DOOR	CST 8MM	
		341	442-591A	SPRING	DOOR	
		342	340-088A	HOLDER	ASSY P/AMP 8MM	
				SCREW		
		452	353-046C	SCREW	(3X10 FZMY)	
		452	353-051A	SCREW	SPECIAL(3X10 FZMY)	
		459	353-046C	SCREW	(3X10 FZMY)	
		462	353-136A	SCREW	SPECIAL(4.6X12.5 FBK)	
		472	353-090A	SCREW	SPECIAL TP	

RUN : DATE : 95. 09. 27

S	AL	LOCA.NO	PART NO(GS)	SPECIFICATION
				CIRCUIT BOARD ASSEMBLY
		PBIO0	6871R-0252A	I/O BOARD (2NDDD1S)
		PBJT0	515-908B	JUNCTION 2 (G/S)
		PBM00	6871R-0245D	VHS MAIN (DV13P 3GL1)
		PBT00	6871R-0248A	TIMER 2NDDD1S

EXPLODED VIEWS

1. Cabinet & Main Frame Section

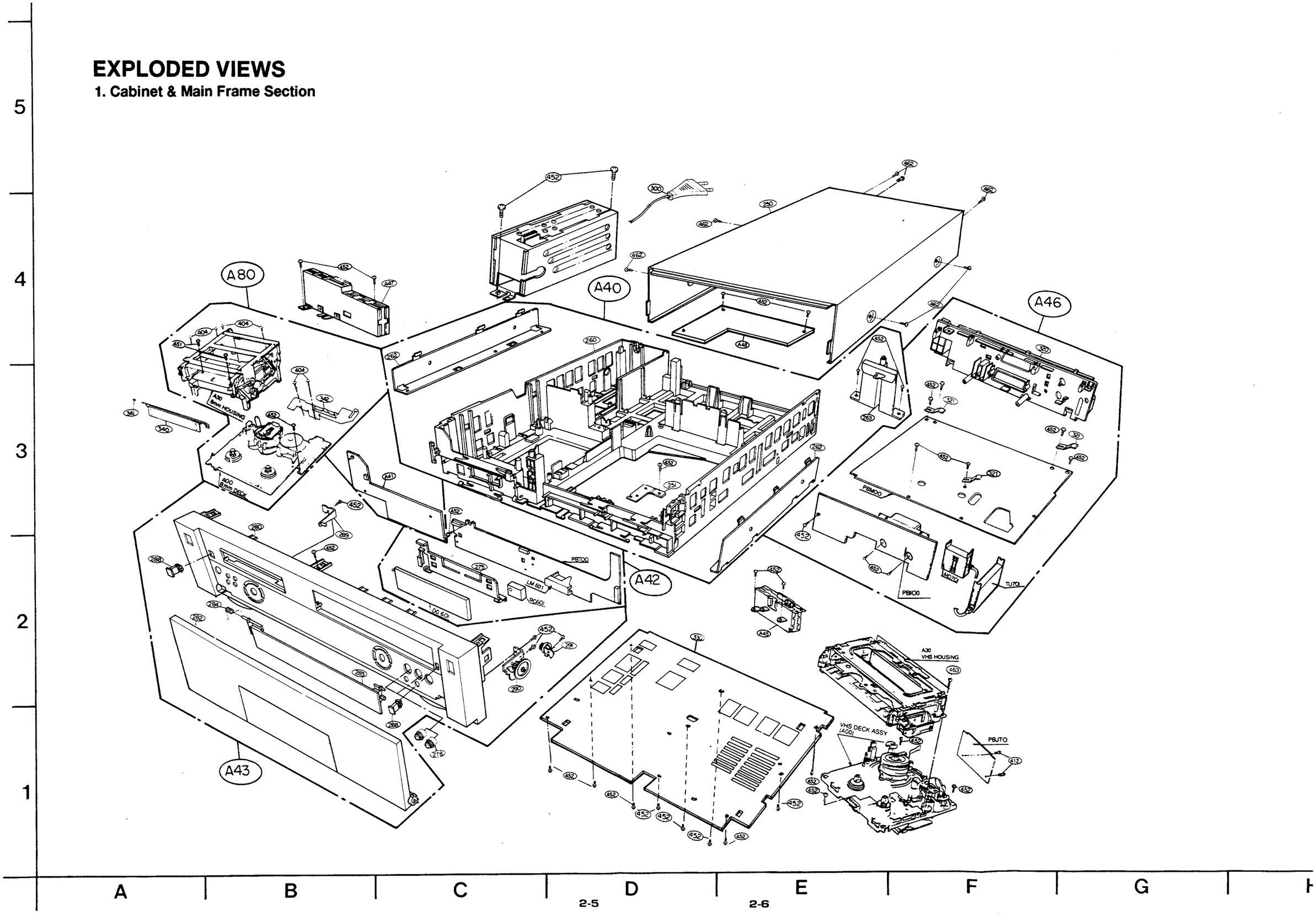

2. Packing Accessory Section

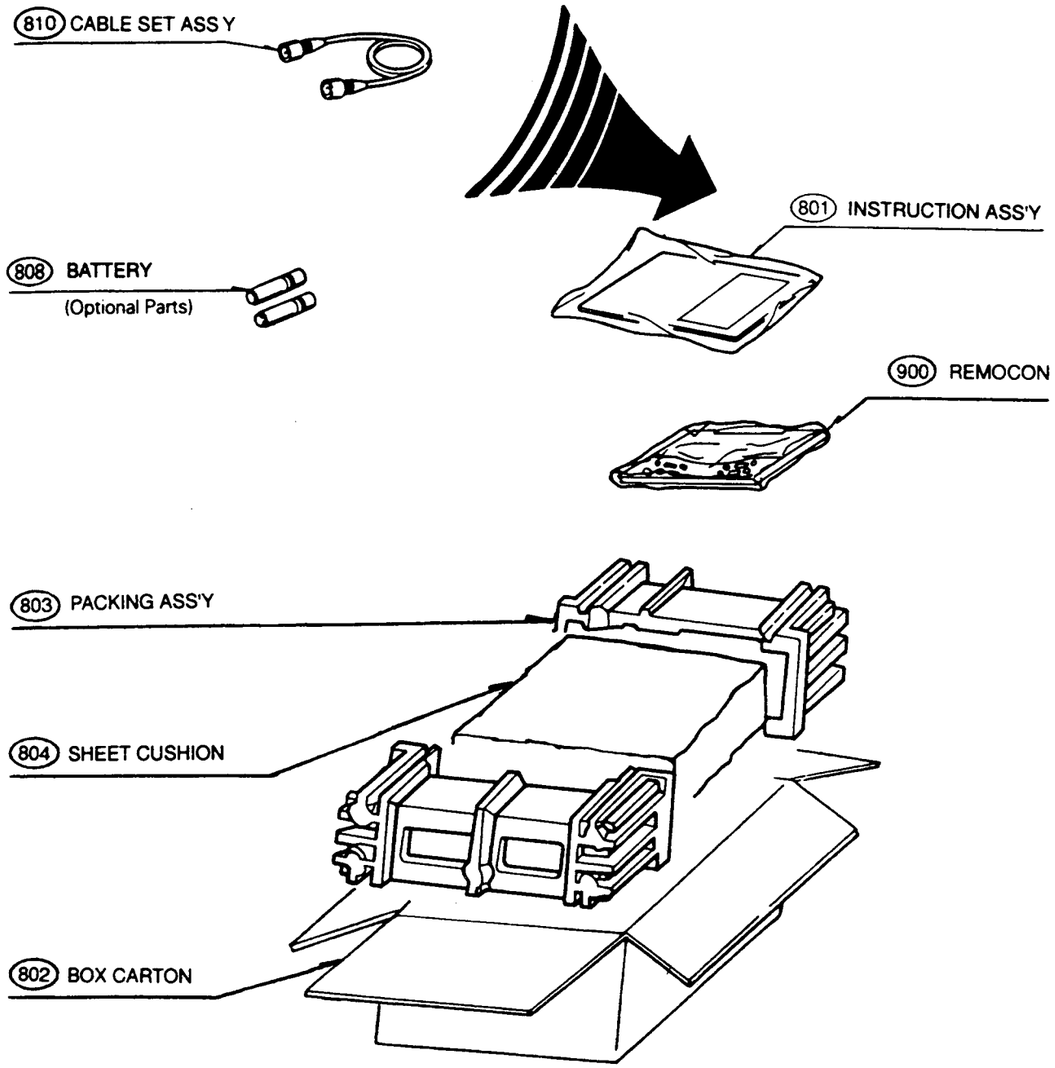

• Replacement Parts List

RUN DATE : 95.09.27
NSP: Not Service Part

S	AL	LOCA.NO	PART NO(GS)	DESCRIPTION	SPECIFICATION	REMARKS
		801	480-657G	INSTRUCTION ASSY		
		802	290-371A	BOX CARTON		
		803	283-217A	PACKING		
		804	291-002D	SHEET CUSHION		NSP
		808	534-008C	BATTERY	AAAM(R03) 1.5V 1PAIR(LOCAL)	
		810	861-505J	CABLE SET ASSY	RF-CABLE ASSY PAL FTZ	

3. Remote Control Section

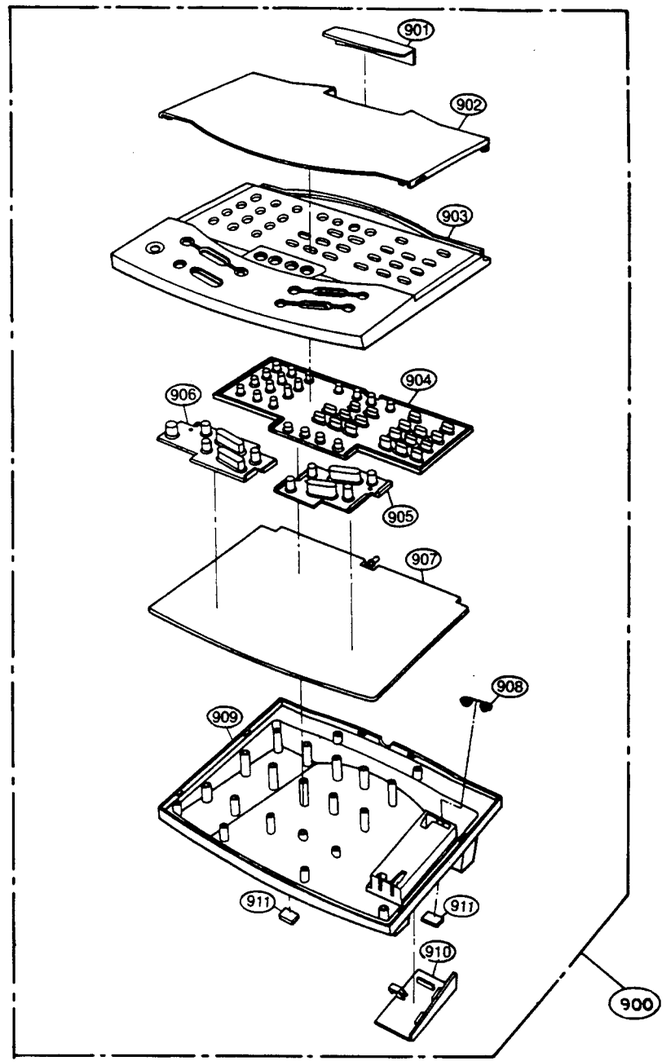

• Replacement Parts List

RUN DATE : 95.09.27
NSP: Not Service Part

S	AL	LOCA.NO	PART NO(GS)	DESCRIPTION	SPECIFICATION	REMARKS
		900	597-121F	REMOTE CONTROL	2ND D/DECK ASSY	
		901	236-558A	WINDOW	FILTER(2ND D/D)	NSP
		902	220-084A	COVER	D/D3 R/C	NSP
		903	217-485J	CASE	TOP	NSP
		904	275-699B	BUTTON	2ND D/DECI	NSP
		905	275-612A	BUTTON	RUBBER VHS (R/C)	NSP
		906	275-611C	BUTTON	RUBBER 8MM (R/C)	NSP
		907	515-824E	PWB ASSY!	REMOCON (2ND DOUBLE DECK)	NSP
		908	442-611A	SPRING	COIL (R/C)	NSP
		909	217-486D	CASE	BOTTOM	NSP
		910	221-857D	COVER	BATTERY	
		911	477-054A	RUBBER	BUMPON	NSP

SECTION 3 ELECTRICAL

ELECTRICAL ADJUSTMENT PROCEDURES

• Electronic Test Equipment Requirement

- Oscilloscope
- Video signal Generator
- Level Meter
- Frequency Counter
- + Driver
- Test Tape (SP)-PAL, (VHS, 8mm)
- Test Tape (SP)-PAL Stereo (8mm)
- Recording Tape (VHS)
- Digital Multimeter

1. VHS Circuit Adjustment

1-1. Servo Circuit

1-1-1. PG Adjustment

MODE	SPECIFICATION	MEASUREMENT POINT	ADJUSTMENT POINT
PLAYBACK	6.5H±0.5H (1H=64.0μsec)	TP201 (H.SW) TP202 (V.Out terminal)	VR201

Procedure :

a. Connect CH-1 of oscilloscope to TP201 (H.SW) and CH-2 to TP202 (Video Out terminal).
b. Playback a VHS PAL SP test tape.
c. Trigger the complex Video signal to CH-1 H.SW, and adjust VR201 so that the distance from switching point of H.SW signal to the starting point of vertical synchronized signal is 6.5H± 0.5H (416±32μsec).

Waveform

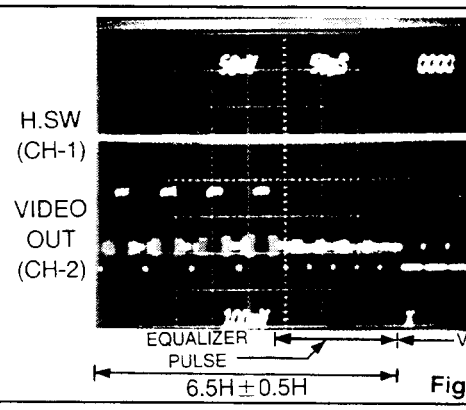

Fig. 3-1-1

1-2. Audio Circuit

1-2-1. Record Bias Adjustment

MODE	SPECIFICATION	MEASUREMENT POINT	ADJUSTMENT POINT
RECORD (SP)	2.5±0.1mV	R473 Both Terminal	VR403

Procedure :

a. Connect (+), (−) terminal of Level Meter to both terminals R473. : TP403 (+), TP404 (-)
b. Loading the recording tape and record.
c. Adjust VR403 so that the oscillation voltage fit to specification.

1-2-2. VCO (Record Current Frequency) Adjustment

MODE	SPECIFICATION	MEASUREMENT POINT	ADJUSTMENT POINT
AV/EE (without signal)	1.4MHz±5kHz	IC402 Pin ㊺(TP401)	VR401
	1.8MHz±5kHz	IC402 Pin ㊷(TP402)	VR402

Procedure :

a. Disconnect the P4904 connector Ass'y from VHS Main circuit board.
b. Connect the P4904 Pin ④ to the P4904 Pin ⑤.
c. Connect the Frequency Counter to IC402 Pin ㊺ (TP401) and adjust VR401 so that the Frequency Counter is 1.4MHz±5kHz.
d. Connect the Frequency Counter to IC402 Pin ㊷ (TP402) and adjust VR402 so that the Frequency Counter is 1.8MHz±5kHz.

Reference)

The set and the Frequency Counter should be connected with 1:1 probe.

1-3. Tuner/IF Circuit

1-3-1. AFC Adjustment

MODE	SPECIFICATION	MEASUREMENT POINT	ADJUSTMENT POINT
CH-11 (217.25MHz) PAL B/G Reception	DC 2.5V±0.1V	IC701 Pin ⑮ (AFC TP)	T701

Procedure :

a. Connect as shown in Fig. 3-1-2.
b. Receive the CH-11 (217.25MHz, strength of RF electric field : 70dBμV).
c. Adjust T701 so that the Digital voltmeter 2 is DC 2.5±0.1V.

CONNECTION DIAGRAM

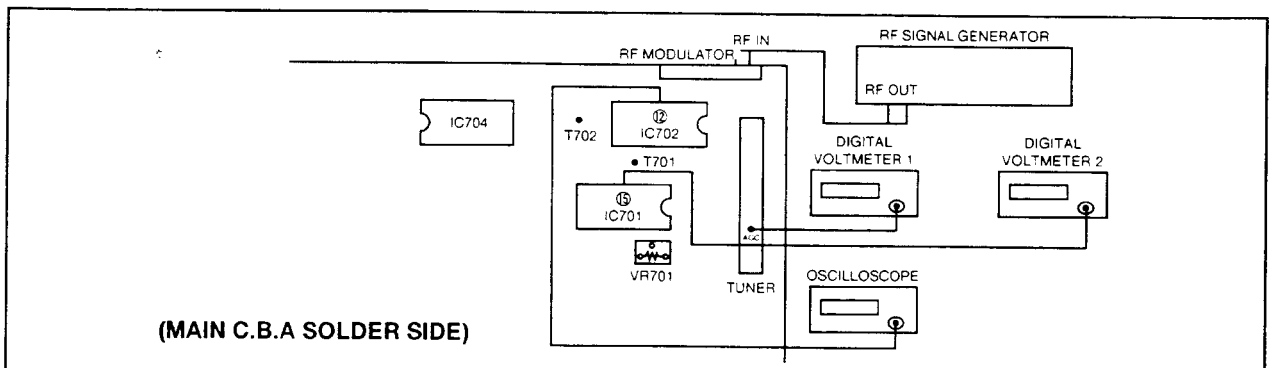

Fig. 3-1-2

1-3-2. RF AGC Adjustment

MODE	SPECIFICATION	MEASUREMENT POINT	ADJUSTMENT POINT
CH-11 (217.25MHz) Normal Reception	DC 5.5±0.1V	Tuner AGC Terminal (AGC TP701)	VR701

Procedure :

a. Connect as shown in Fig. 3-1-2.
b. Receive the CH-11 (217.25MHz, strength of RF electric field : 70dBμV).
c. Adjust VR701 so that the Digital voltmeter 1 is DC 5.5±0.1V.

1-3-3. SIF Adjustment

MODE	SPECIFICATION	MEASUREMENT POINT	ADJUSTMENT POINT
CH-11 (217.25MHz) Normal Reception	Refer to waveform	IC702 Pin ⑫ (SIF TP703)	T702

Procedure :

a. Connect as shown in Fig. 3-1-2.
b. Receive the CH-11 (217.25MHz, strength of RF electric field : 70dBμV).
c. Adjust T702 so that the waveform of oscilloscope is as shown in Fig. 3-1-3.
d. Setting mode of oscilloscope
Time : 20μsec.
Voltage : 0.5V.

Waveform

Before Adjustment

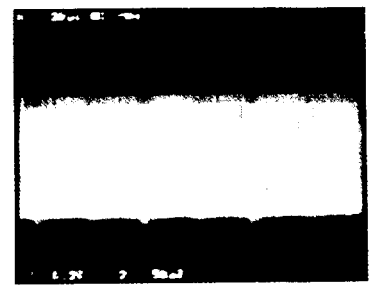

After Adjustment

Fig. 3-1-3

***Caution in testing**

1. When practing this adjustment, adjust after more than 10minutes with TV set turning on.
2. Adjust after completing itself test of measuring apparatus.
3. Sweep OSC marker frequency is followed by Table 1.

***Abbreviation**

- APC : Adjacent Picture Carrier
- SIF : Sound Intermediate Frequency
- CIF : Color Intermediate Frequency
- CEN : Center Frequency
- PIF : Picture Intermediate Frequency
- ASC : Adjacent Sound Carrier

Table 1 Frequency Table (MHz)

BROADCASTING SYSTEM	ADJUSTMENT MARKER FREQUENCY					
	APC	SIF	CIF	CEN	PIF	ASC
PAL B/G	31.90	33.40	34.47	36.00	38.90	40.40

2. 8mm Circuit Adjustment

2-1. Servo Circuit

2-1-1. PG Adjustment

MODE	SPECIFICATION	MEASUREMENT POINT	ADJUSTMENT POINT
PLAYBACK	7H±1.8H (1H=64.0μsec)	P2814 Pin ⑬ (H.SW) PV402 Pin ① (V.Out terminal)	VR202

Procedure :

a. Connect CH-1 of oscilloscope to TP801 (P2814 Pin ⑬, H.SW) and CH-2 to TP802 (PV402 Pin ①, Video Out terminal).
b. Playback a 8mm PAL SP test tape.
c. Trigger the complex Video signal to CH-1 H.SW, and adjust VR202 so that the distance from switching point of H.SW signal to the starting point of vertical synchronized signal is 7H±1.8H (448±115.2μsec).

Waveform

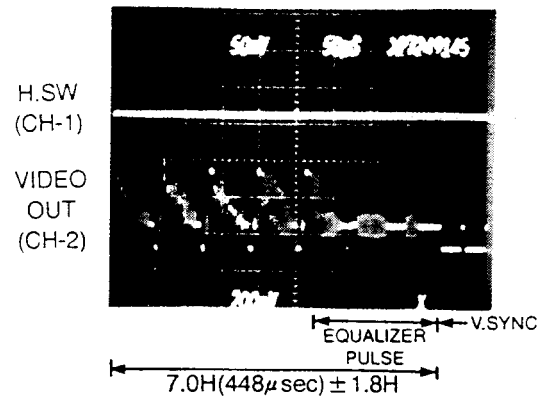

Fig. 3-2-1

2-2. Y/C Circuit

2-2-1. Playback Output Level Adjustment

MODE	SPECIFICATION	MEASUREMENT POINT	ADJUSTMENT POINT
PLAYBACK (SP)	1.0±0.1Vp-p	TP3A1 (8mm Video Out)	VR3A0

Procedure :

a. Connect CH-1 of oscilloscope to TP3A1.
b. Playback a 8mm PAL SP test tape (Color bar with 100% white signal).
c. Adjust VR3A0 so that Video out level is 1.0±0.1Vp-p.
d. If only measurement point is the Video out Jack (SCART Jack), specification is 2±0.2Vp-p.

Waveform

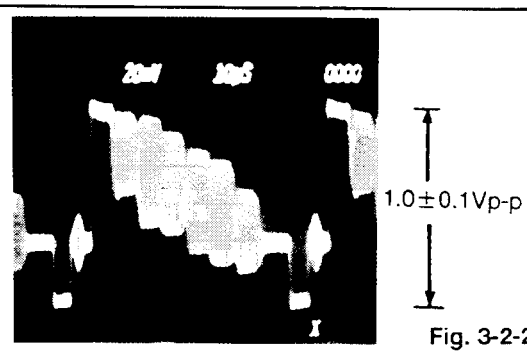

Fig. 3-2-2

2-2-2. Color VCO Adjustment

MODE	SPECIFICATION	MEASUREMENT POINT	ADJUSTMENT POINT
PLAYBACK (SP)	DC 2.5±0.1V	TP3A2	FL3A1

Procedure :

a. Connect CH-1 of oscilloscope to TP3A2.
b. Playback a 8mm PAL SP test tape (Color bar with 100% white signal).
c. Adjust FL3A1 so that DC level is 2.5±0.1V.

2-3. Audio Circuit

2-3-1. VCO Adjustment

MODE	SPECIFICATION	MEASUREMENT POINT	ADJUSTMENT POINT
STOP	DC 2.05±0.1V	TP4A2	VR4A0
		TP4A4	VR4A4

Procedure :

a. Connect the Digital Multimeter to TP4A2 and adjust VR4A0 so that the Digital Multimeter is DC2.05±0.1V.
b. Connect the Digital Multimeter to TP4A4 and adjust VR4A4 so that the Digital Multimeter is DC2.05±0.1V.

2-3-2. Deviation (L) Adjustment

MODE	SPECIFICATION	MEASUREMENT POINT	ADJUSTMENT POINT
PLAYBACK (SP)	0±0.5dBm	SCART AUDIO (L) OUT	VR4A1

Procedure :

a. Connect the (+) terminal of Level Meter to SCART Audio (L) Out.
b. Playback a 8mm PAL Mono test tape.
c. Adjust VR4A1 so that level is 0±0.5dBm.

2-3-3. Deviation (R) and Matrix Adjustment

MODE	SPECIFICATION	MEASUREMENT POINT	ADJUSTMENT POINT
PLAYBACK (SP)	0±3dBm	SCART AUDIO (R) OUT	VR4A3
		SCART AUDIO (L), (R) OUT	VR4A2

Procedure :

a. Connect the (+) terminal of Level Meter to SCART Audio (R) Out.
b. Playback a 8mm PAL Stereo test tape.
c. Adjust VR4A3 so that level is 0±3dBm.
d. And then, connect the CH-1 of oscilloscope to SCART Audio (L) Out.
e. Connect the CH-2 of oscilloscope to SCART Audio (R) Out.
f. Adjust VR4A2 so that the separation of stereo is done well.

MEMO

BLOCK DIAGRAMS

1. VHS Block Diagrams

1-1. Power Block Diagram

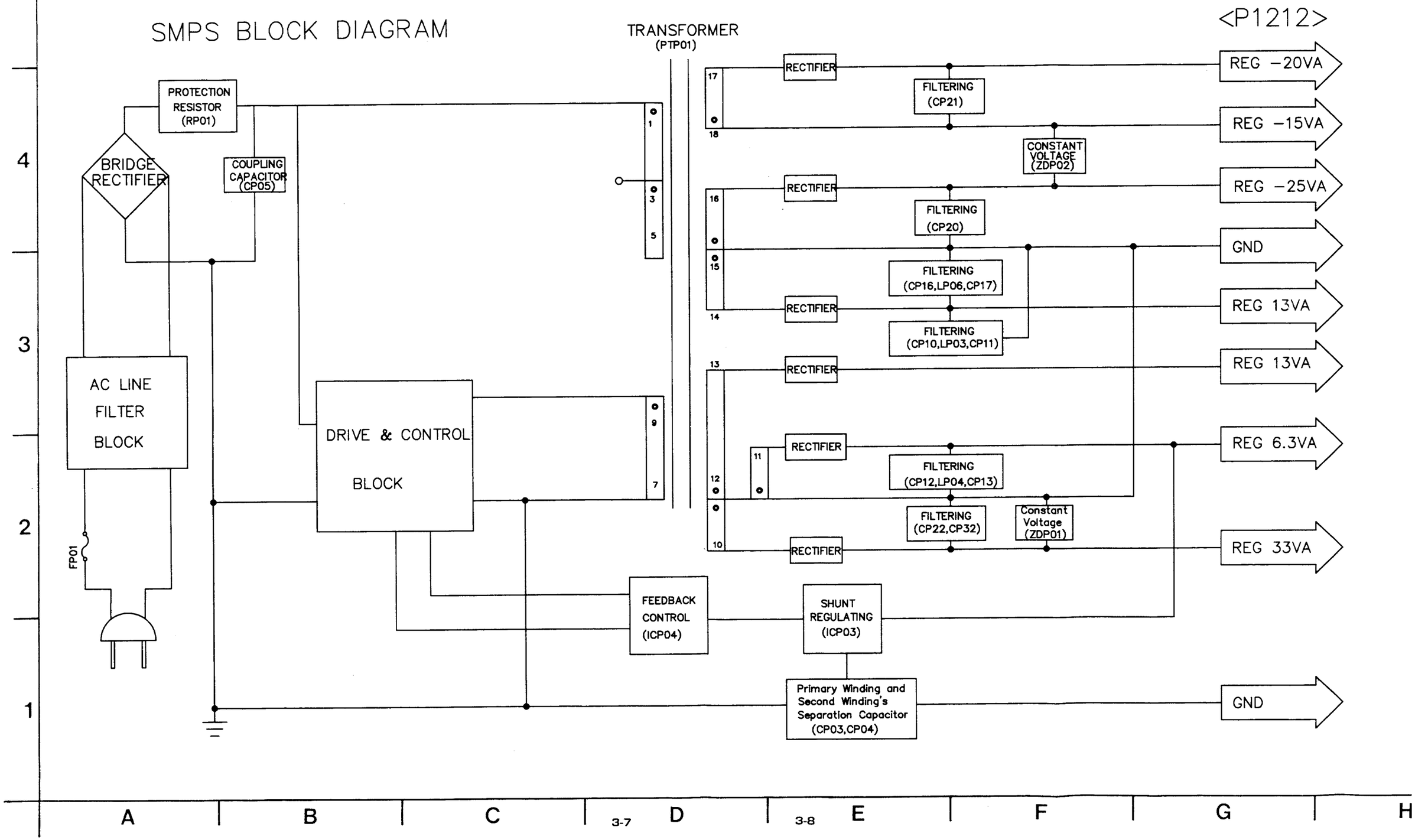

1-2. Pre-Amp Block Diagram

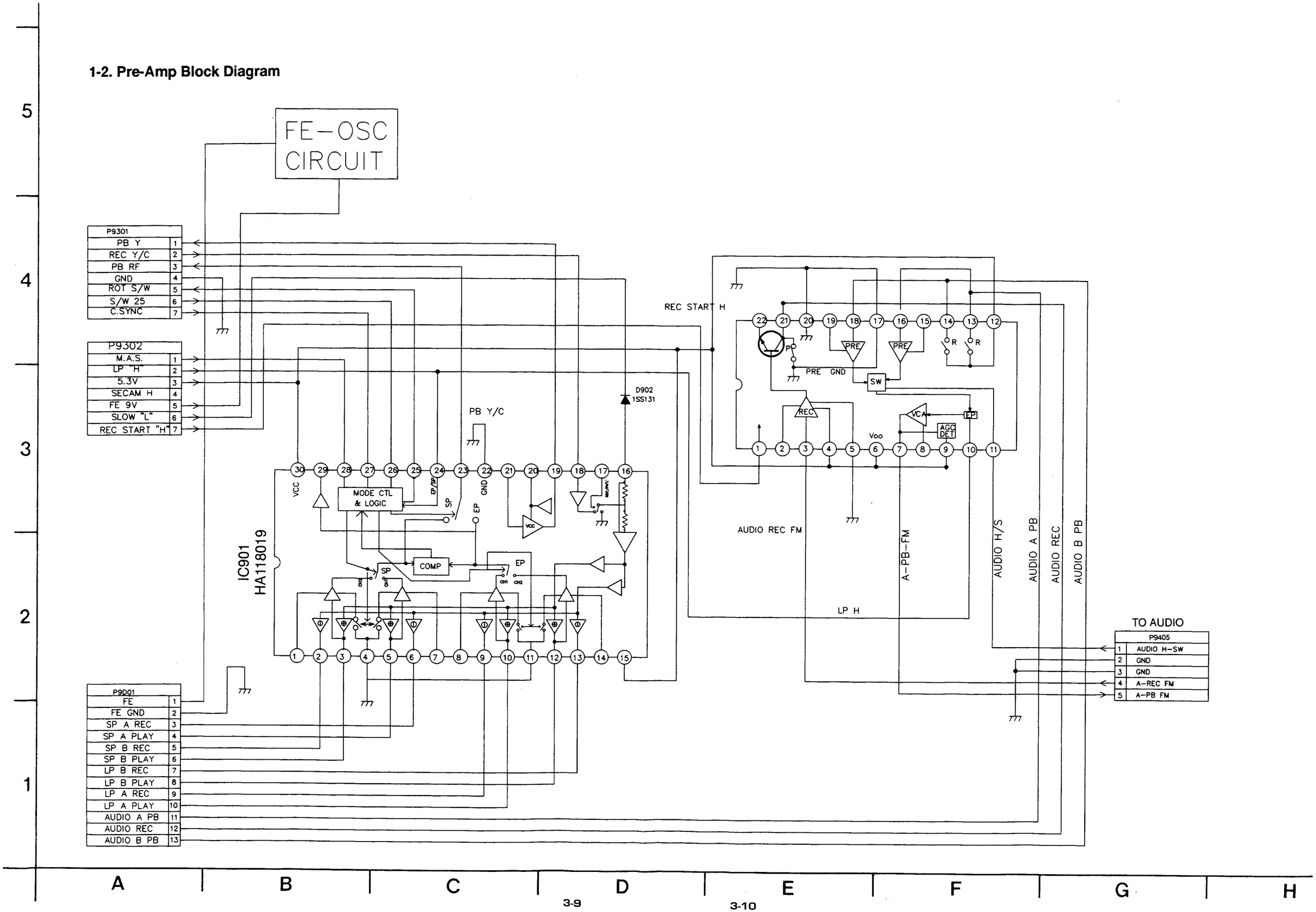

1-3. Main System (Servo, Syscon) Block Diagram

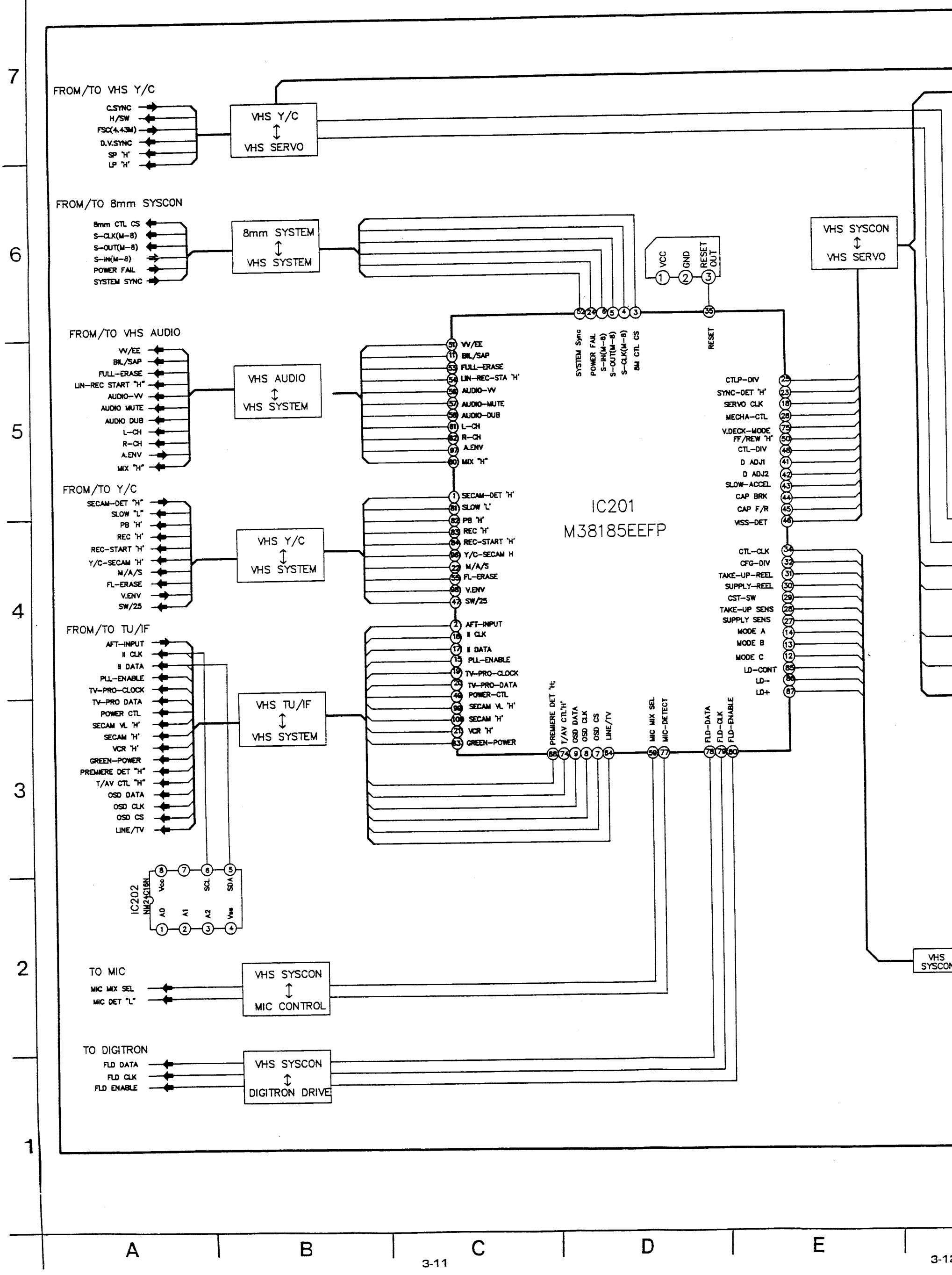

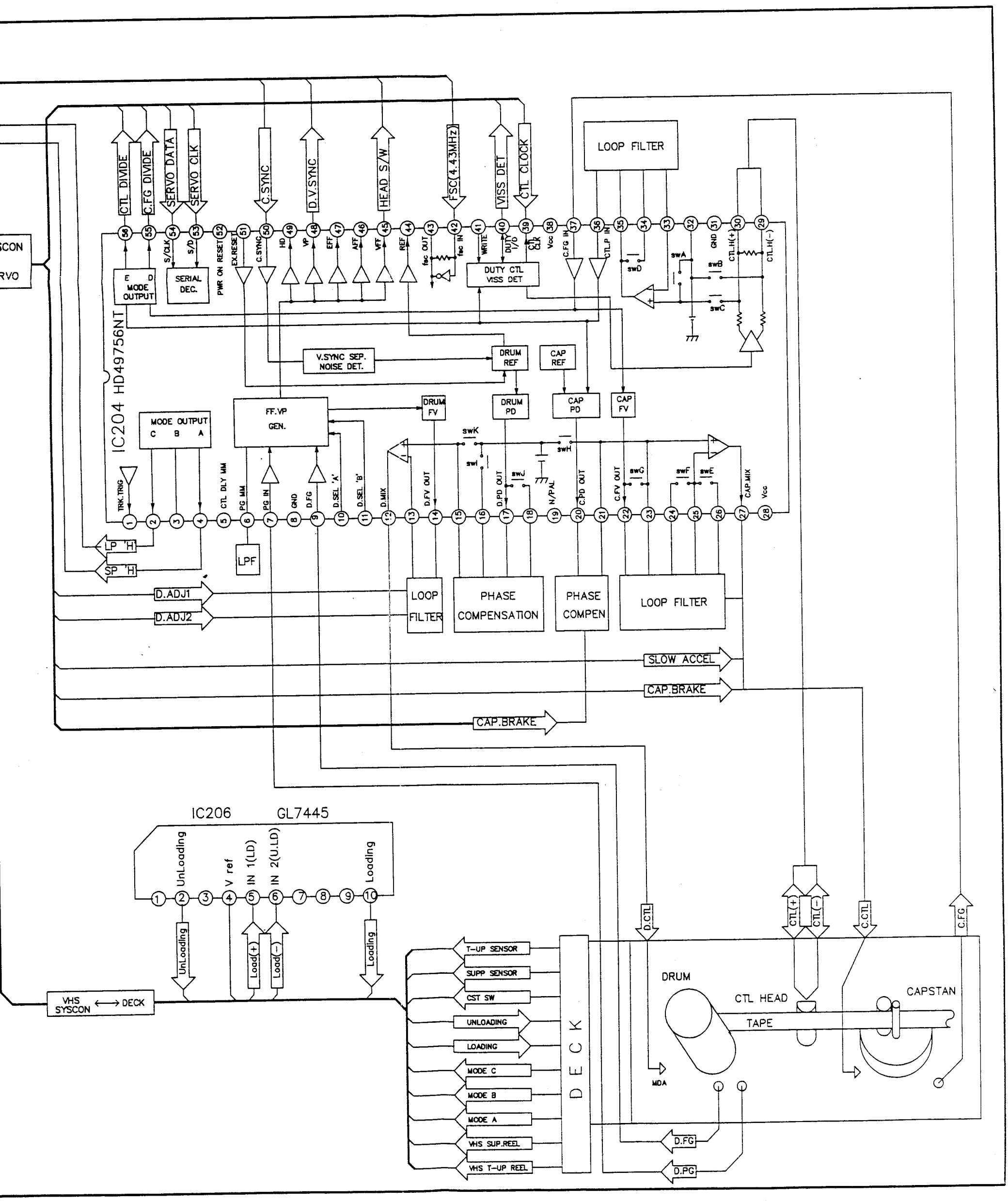
IC204 HD49756NT
CTL DIVIDE
C.FG DIVIDE
SERVO DATA
SERVO CLK
C.SYNC
D.V.SYNC
HEAD S/W
FSC(4.43MHz)
VISS DET
CTL CLOCK
LOOP FILTER
SCON
RVO
MODE OUTPUT
SERIAL DEC.
DUTY CTL VISS DET
V.SYNC SEP. NOISE DET.
DRUM REF
CAP REF
FF.VP GEN.
DRUM FV
DRUM PD
CAP PD
CAP FV
MODE OUTPUT C B A
LP 'H'
SP 'H'
LPF
D.ADJ1
D.ADJ2
LOOP FILTER
PHASE COMPENSATION
PHASE COMPEN
LOOP FILTER
SLOW ACCEL
CAP.BRAKE
CAP.BRAKE
IC206 GL7445
UnLoading
V ref
IN 1(LD)
IN 2(U.LD)
Loading
UnLoading
Load(+)
Load(-)
Loading
VHS SYSCON ⟷ DECK
T-UP SENSOR
SUPP SENSOR
CST SW
UNLOADING
LOADING
MODE C
MODE B
MODE A
VHS SUP.REEL
VHS T-UP REEL
DECK
D.CTL
CTL(+)
CTL(-)
C.CTL
C.FG
DRUM
CTL HEAD
CAPSTAN
TAPE
MDA
D.FG
D.PG

1-4. Y/C Block Diagram

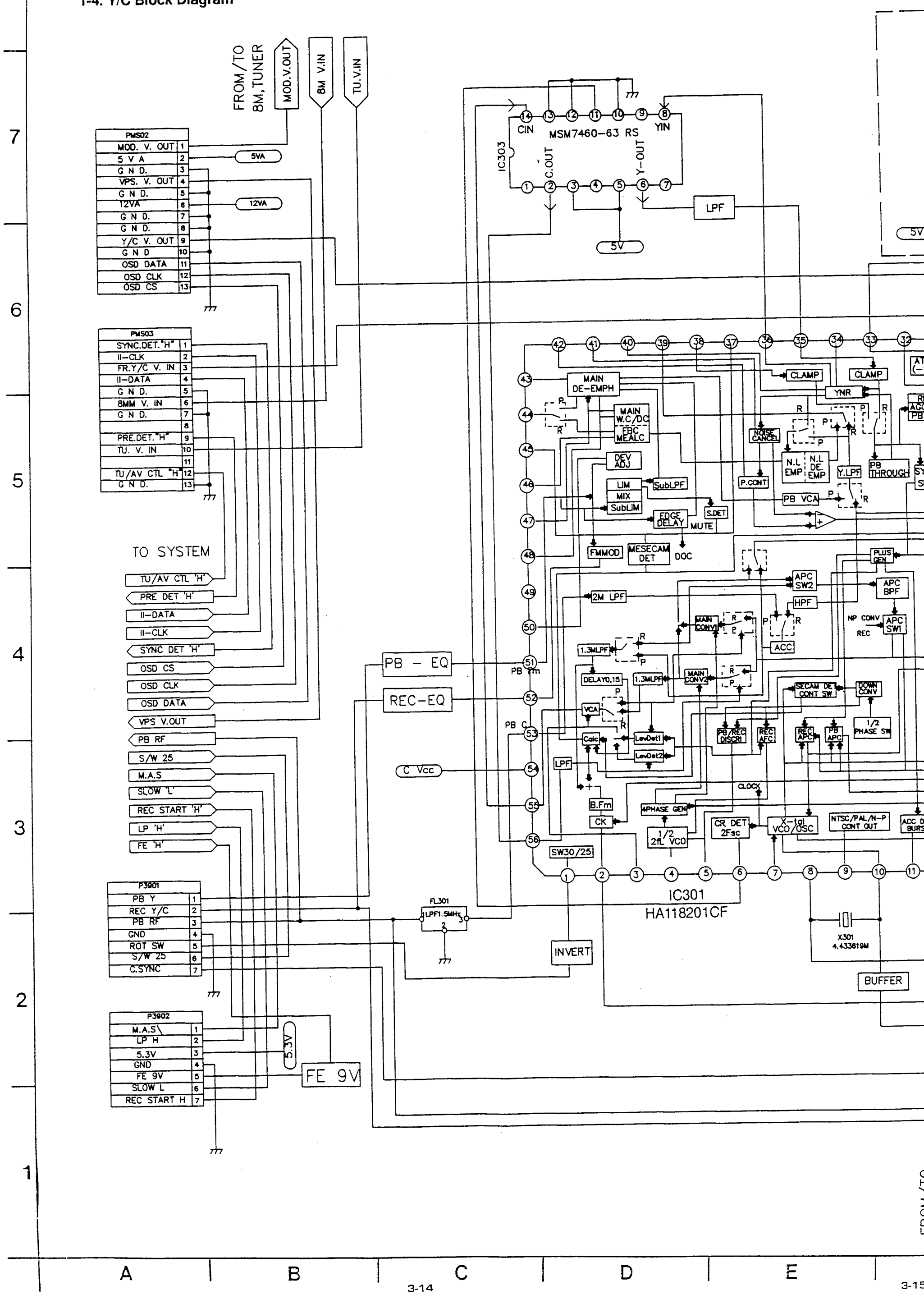

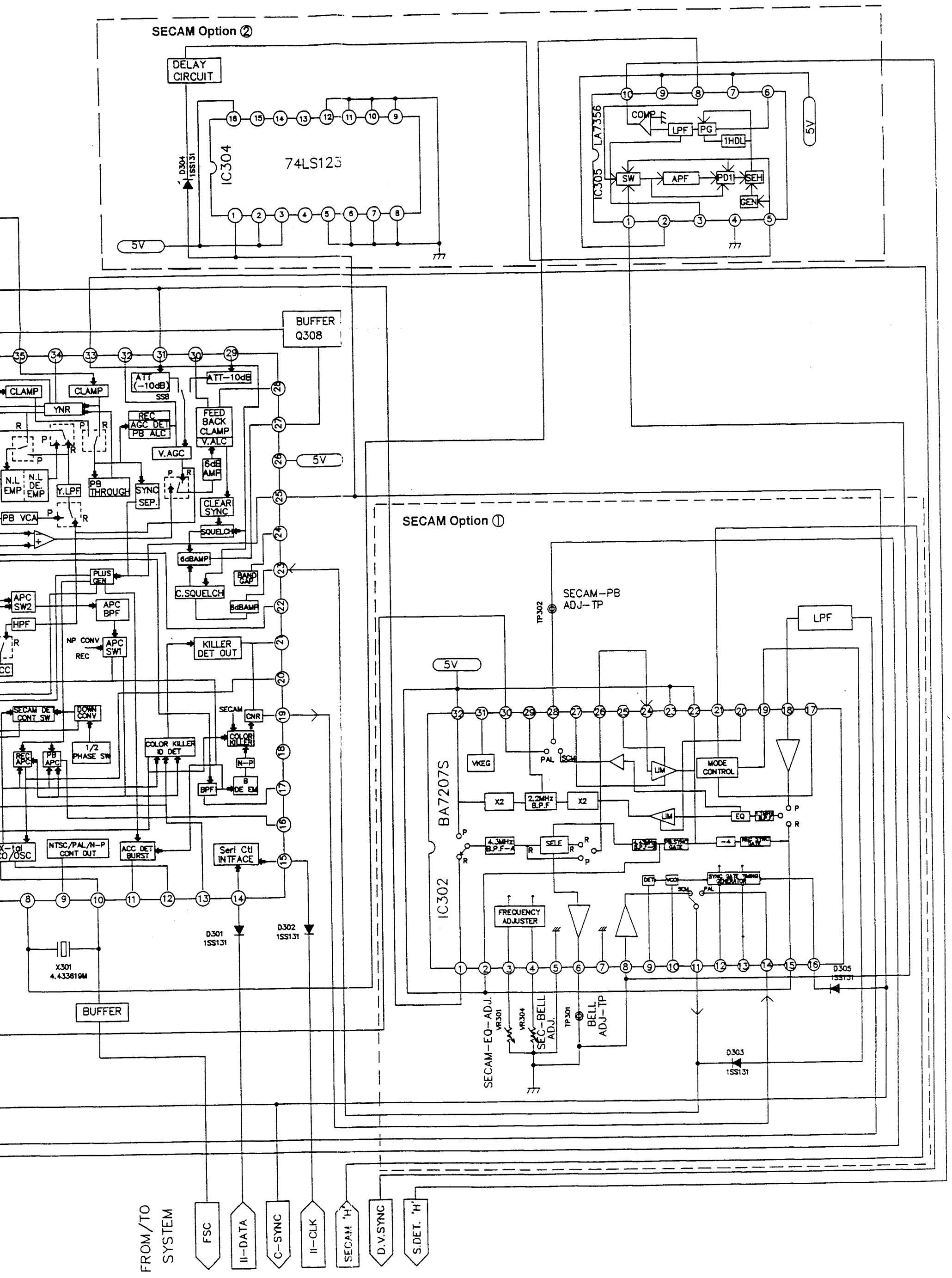
SECAM Option ②
DELAY CIRCUIT
IC304
74LS123
D304
1SS131
5V
IC305
LA7356
COMP
LPF
PG
1HDL
SW
APF
PD1
SEH
GEN
BUFFER
Q308
CLAMP
YNR
ATT (-10dB)
SSB
ATT-10dB
REC
AGC DET
PB ALC
FEED BACK CLAMP
V.ALC
V.AGC
6dB AMP
N.L EMP
N.L DE. EMP
Y.LPF
PB THROUGH
SYNC SEP.
CLEAR SYNC
PB VCA
SQUELCH
6dBAMP
C.SQUELCH
BAND CAP
PLUS GEN
APC SW2
APC BPF
HPF
NP CONV
REC
APC SW1
KILLER DET OUT
SECAM DE CONT SW
DOWN CONV
SECAM
CNR
COLOR KILLER
REC APC
PB APC
1/2 PHASE SW
COLOR KILLER ID DET
N-P
BPF
B DE EM
X-tal CO/OSC
NTSC/PAL/N-P CONT OUT
ACC DET BURST
Seri Ctl INTFACE
X301
4.433619M
BUFFER
D301
1SS131
D302
1SS131
SECAM Option ①
SECAM-PB ADJ-TP
TP302
LPF
BA7207S
IC302
VKEG
PAL
SCM
LIM
MODE CONTROL
X2
2.2MHz B.P.F
EQ
4.3MHz B.P.F-A
SELE
FREQUENCY ADJUSTER
SYNC GATE TIMING GENERATOR
D305
1SS131
SECAM-EQ-ADJ.
VR301
VR304
SEC-BELL ADJ.
TP301
BELL ADJ-TP
D303
1SS131
FROM/TO SYSTEM
FSC
II-DATA
C-SYNC
II-CLK
SECAM 'H'
D.V.SYNC
S.DET. 'H'

1-5. Audio Block Diagram

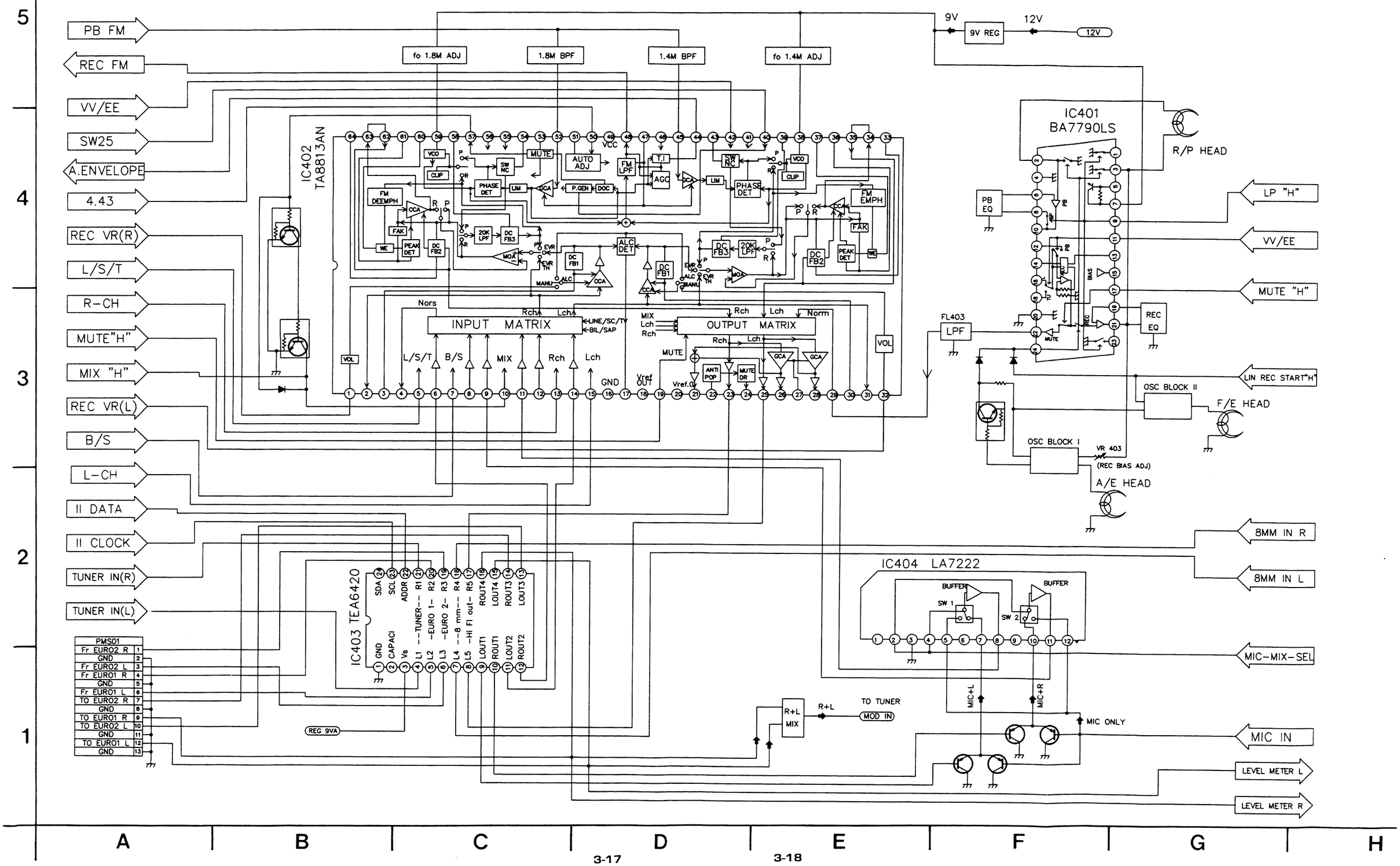

1-6. Timer Block Diagram

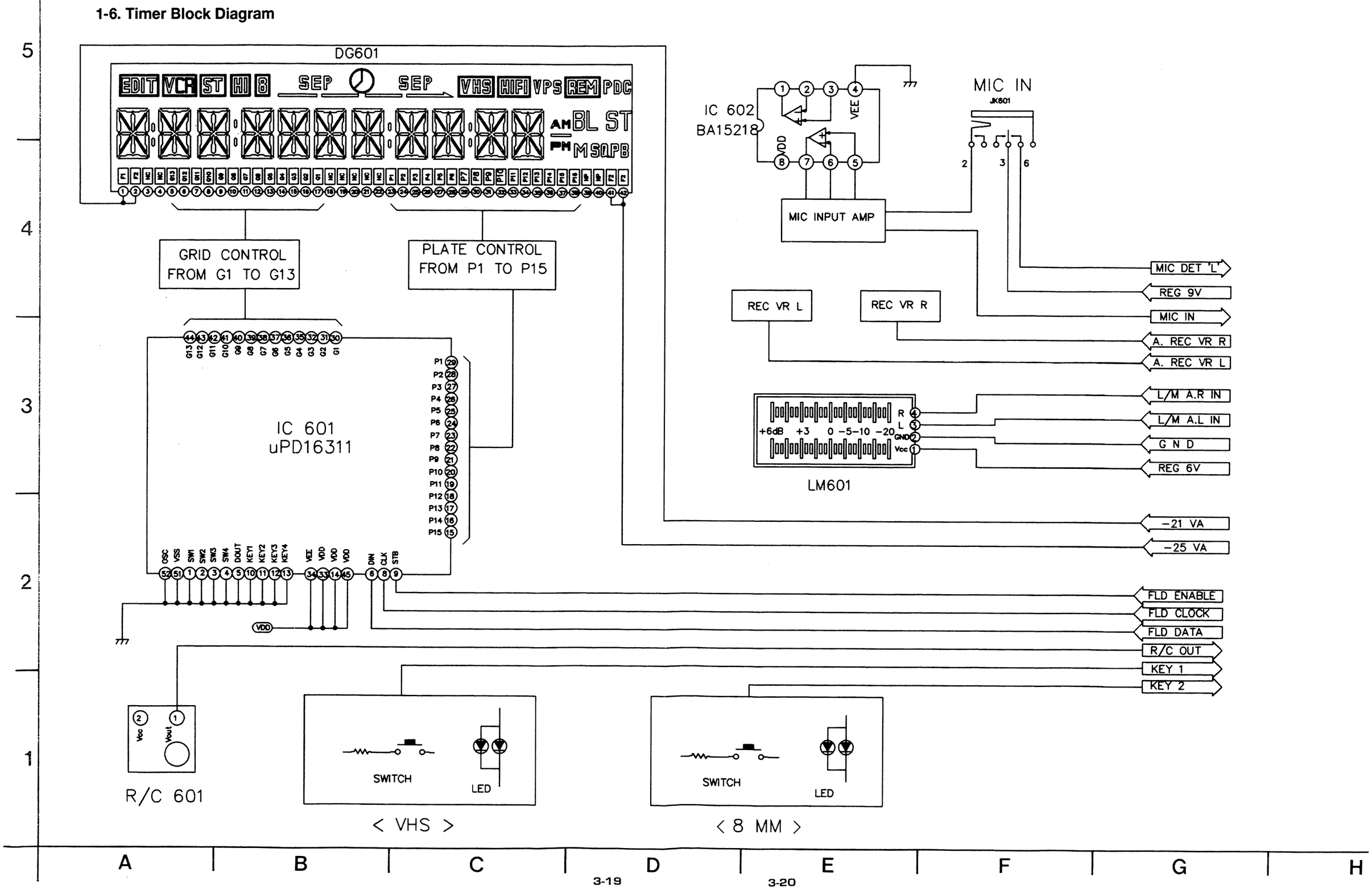

1-7. Tuner/IF Block Diagram

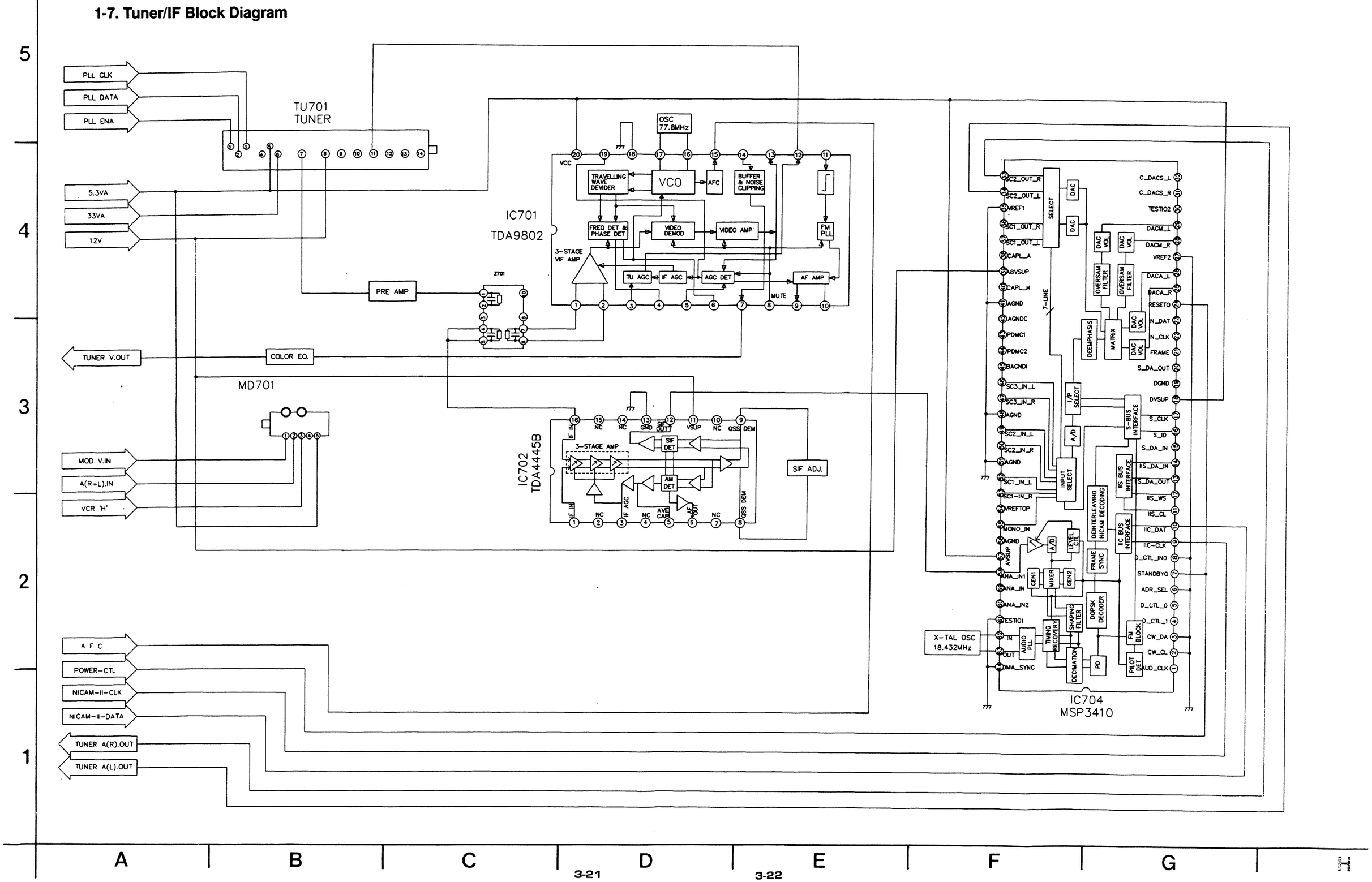

1-8. In/Out & Function OSD Block Diagram

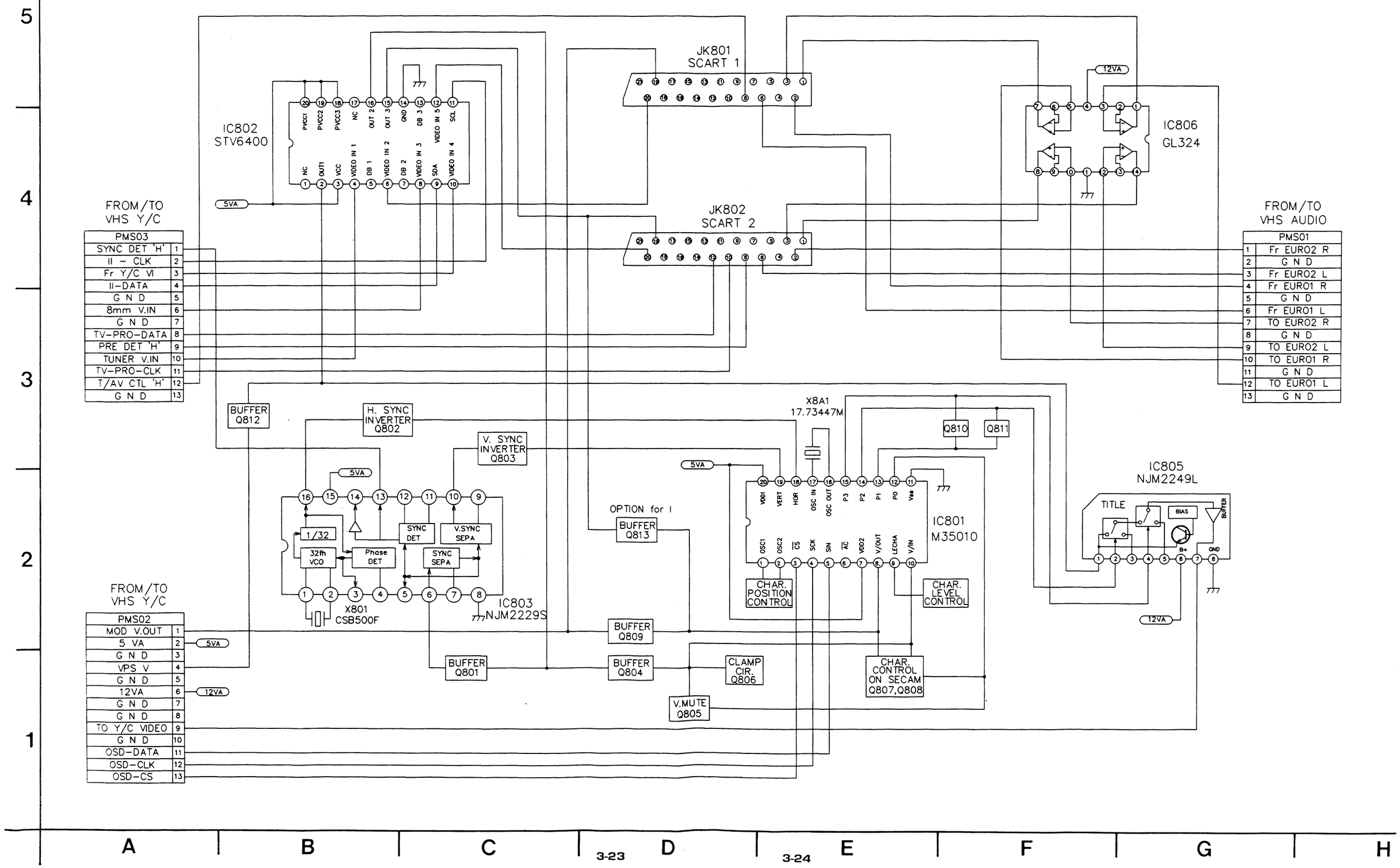

2-2. Audio Block Diagram

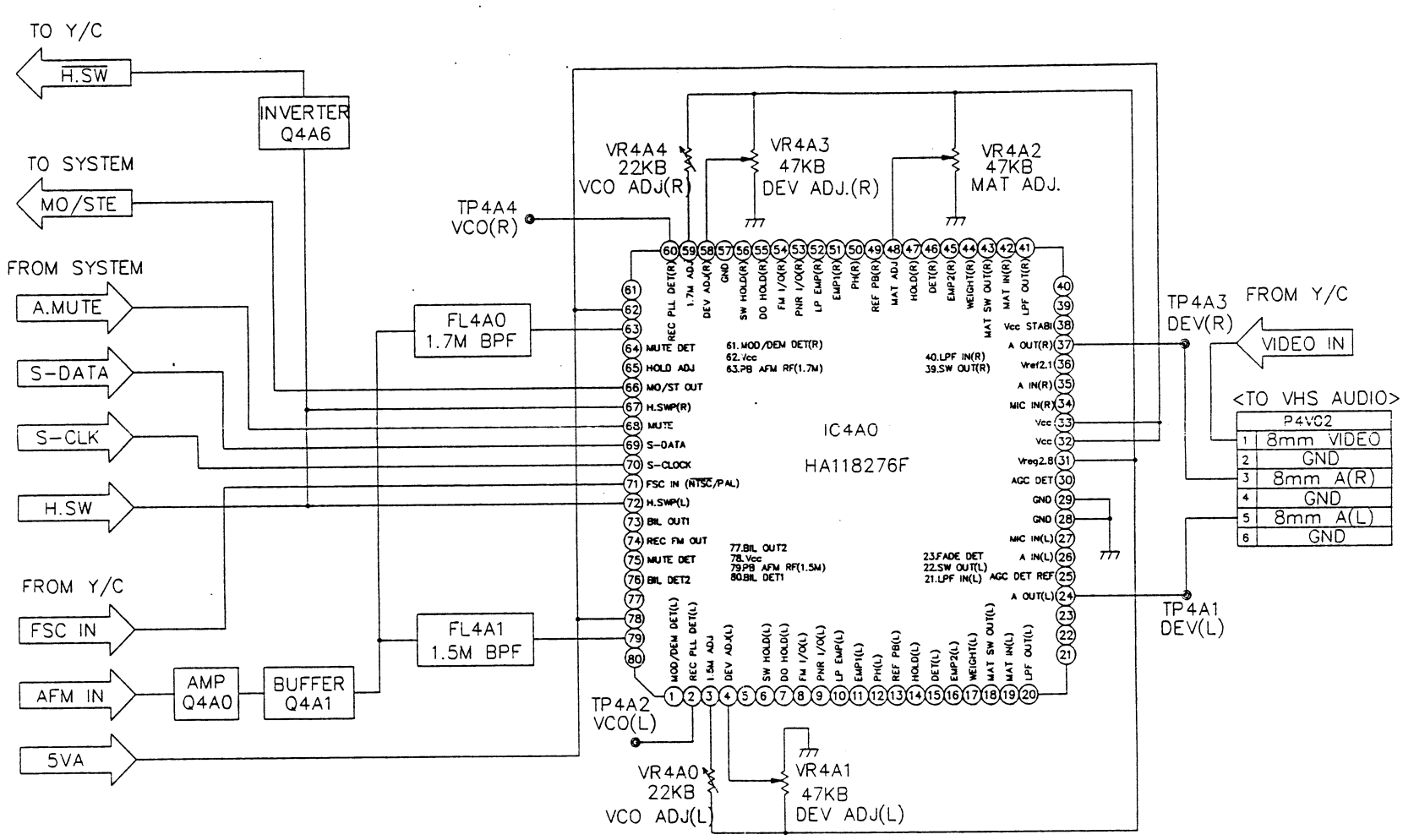

2-3. Pre-Amp Block Diagram

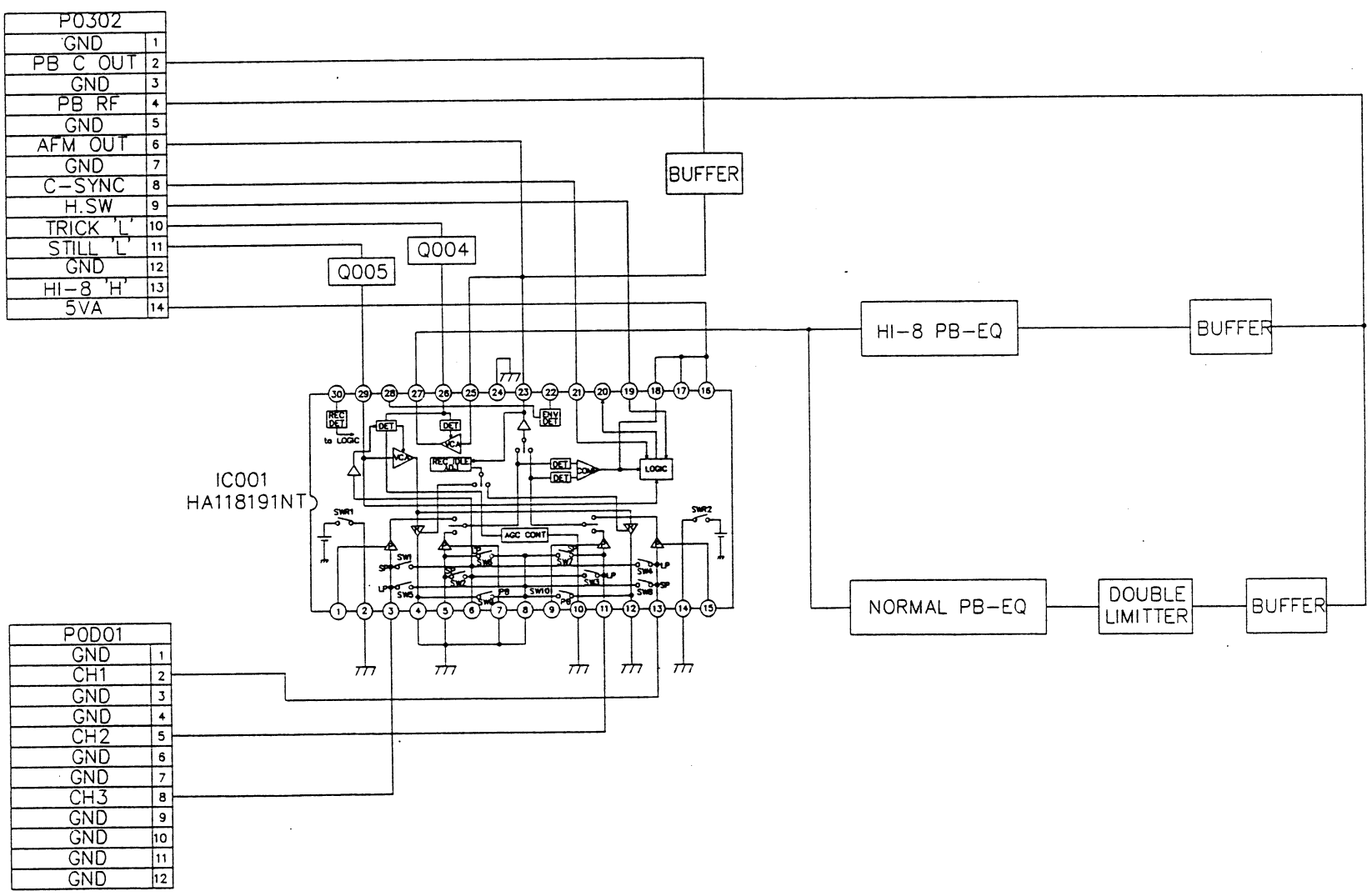

2-4. Y

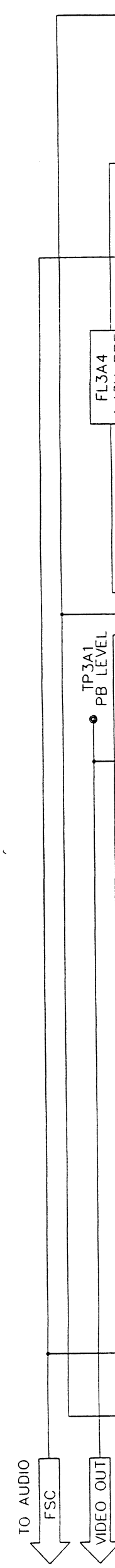

2-4. Y/C Block Diagram

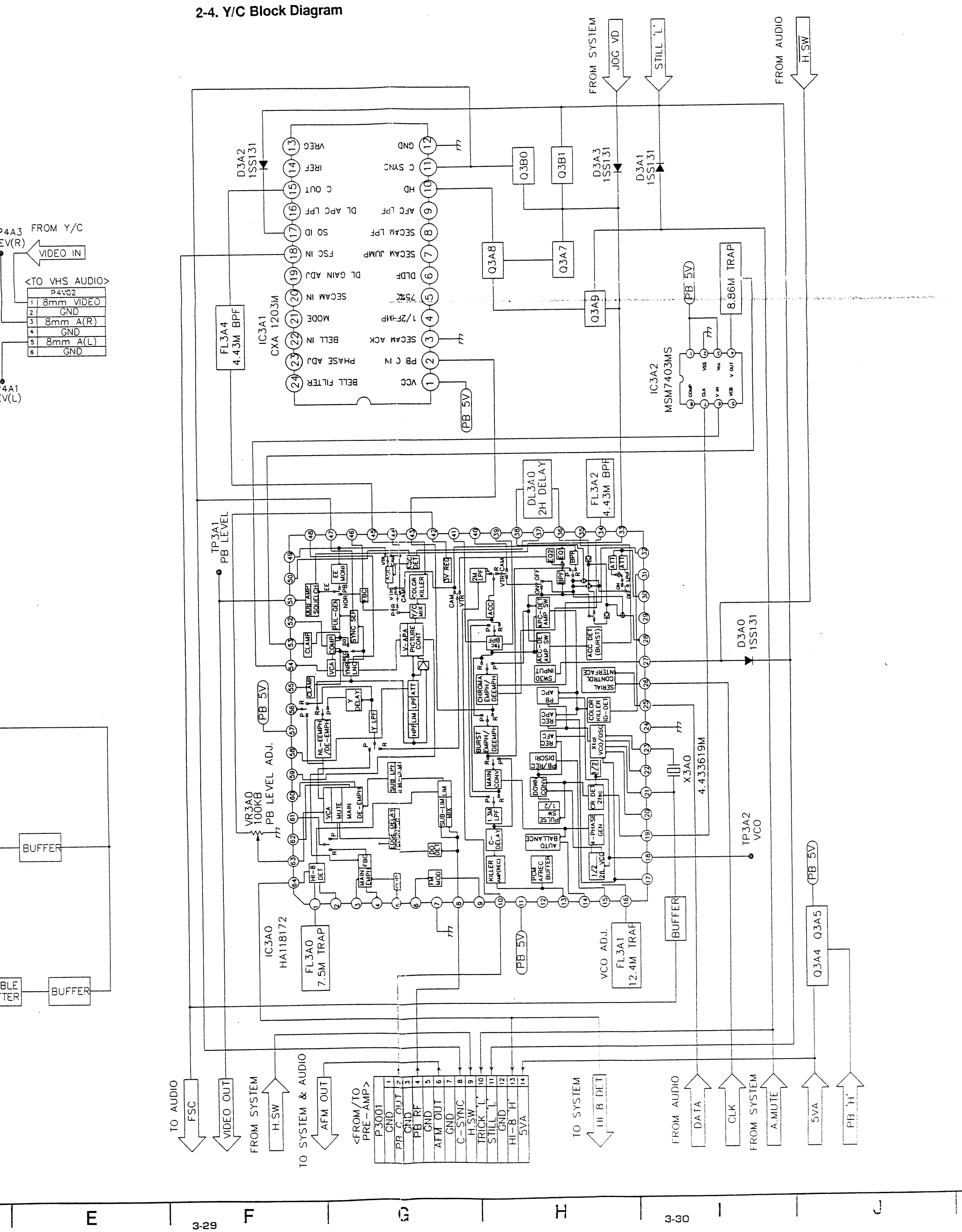

CIRCUIT DIAGRAMS

1. VHS Circuit Diagrams

1-1. Power Circuit Diagram

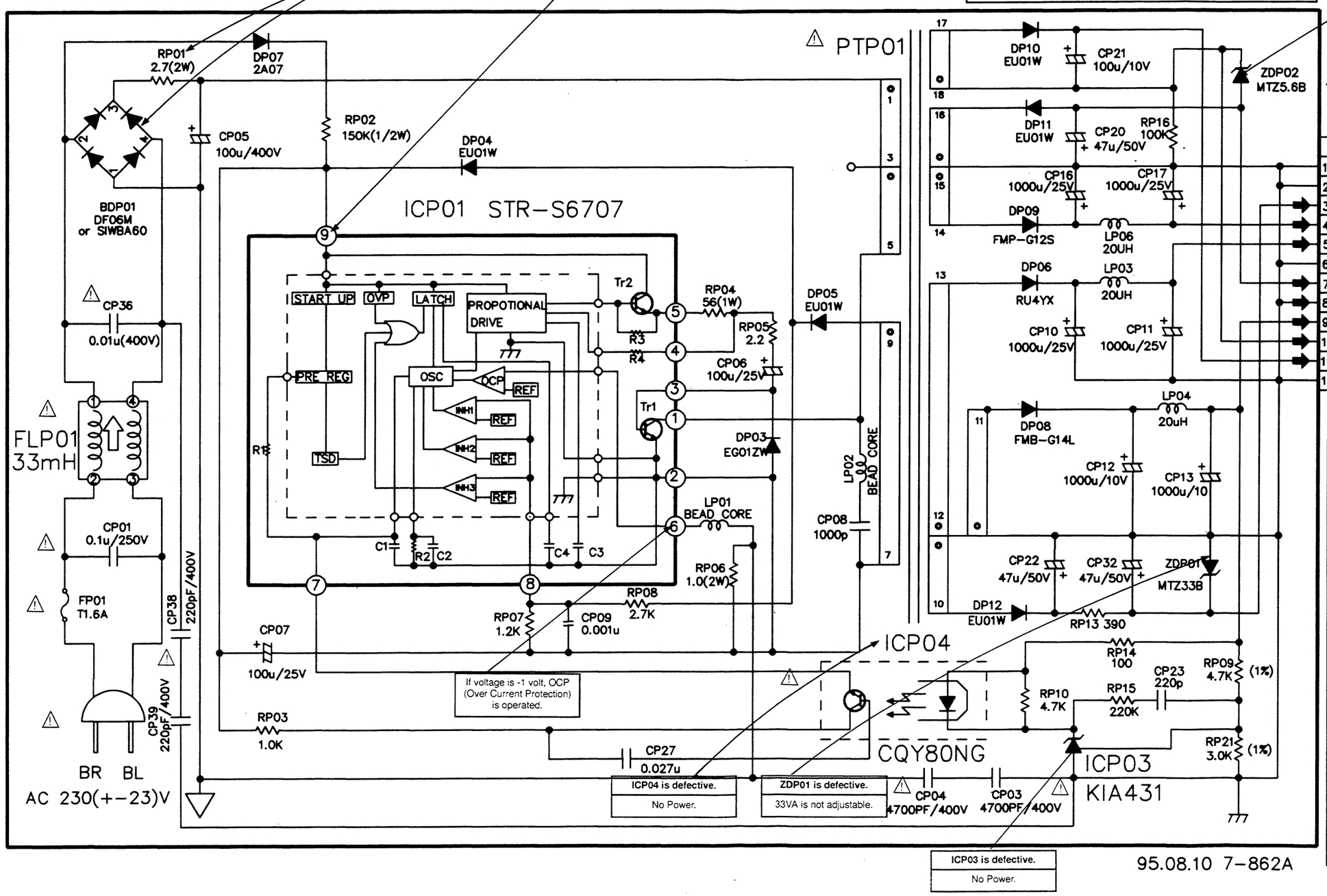

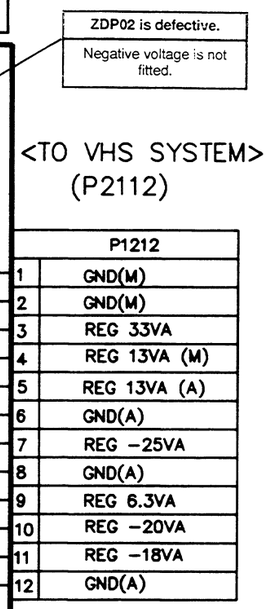

LOCATION GUIDE

BDP01	A4	DP10	F5
CP01	A3	DP11	F5
CP03	F1	DP12	F2
CP04	E1	FLP01	A3
CP05	B5	FP01	A2
CP06	D3	ICP03	F1
CP07	B2	ICP04	E2
CP08	E3	LP01	D3
CP09	D2	LP02	E3
CP10	F4	LP03	F4
CP11	F4	LP04	G3
CP12	F3	LP06	F4
CP13	G3	P1212	H5
CP16	F4	RP01	A5
CP17	G4	RP02	B5
CP20	F5	RP03	B2
CP21	F5	RP04	D4
CP22	F2	RP05	D4
CP23	G2	RP06	D2
CP27	D1	RP07	C2
CP32	F2	RP08	D2
CP36	A4	RP09	G2
CP38	B2	RP10	F2
CP39	A2	RP13	F2
DP03	D3	RP14	F2
DP04	C5	RP15	F2
DP05	E4	RP16	G5
DP06	F4	RP21	G1
DP07	B5	ZDP01	G2
DP08	F3	ZDP02	G5
DP09	F4		

• VHS System Waveform

① 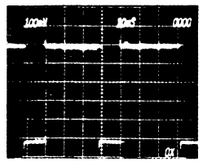

IC204 Pin ①
Tracking Trigger
(100mV/10msec)

② 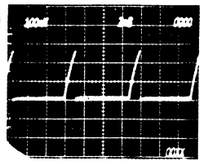

IC204 Pin ⑥
PG Mono-Multi
(100mV/2msec)

③ 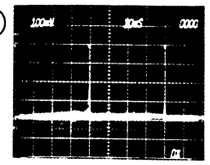

IC204 Pin ⑦
PG Input
(100mV/10msec)

④ 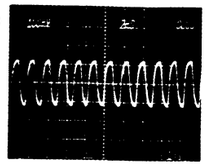

IC204 Pin ⑨ Drum
Frequency Generator
Input (100mV/2msec)

⑤ 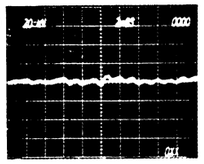

IC204 Pin ㉗
Capstan Control
(20mV/2msec)

⑥ 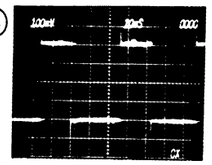

IC204 Pin ㉙
Record Control (-)
(100mV/10msec)

⑦ 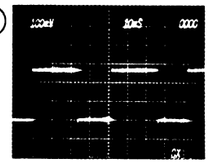

IC204 Pin ㉚
Record Control (+)
(100mV/10msec)

⑧ 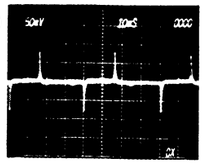

IC204 Pin ㉟
Playback Control Pulse
(50mV/10msec)

⑨ 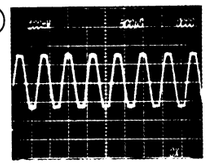

IC204 Pin ㊲
Capstan Frequency Generator
Input (100mV/500μsec)

⑩ 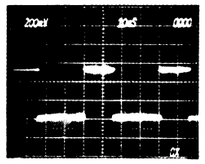

IC204 Pin ㊴
Control Clock
(200mV/10msec)

⑪ 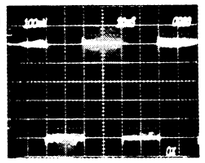

IC204 Pin ㊺
Video Head Switching
Pulse (100mV/10msec)

⑫ 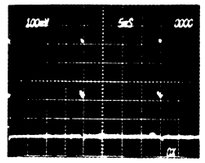

IC204 Pin ㊽
Vertical Pulse (VP)
(100mV/5msec)

⑬ 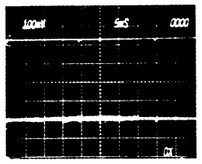

IC204 Pin ㊿
C-SYNC Input terminal
(100mV/5msec)

⑭ 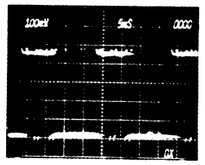

IC204 Pin (53)
Servo Data Input terminal
(100mV/5msec)

⑮ 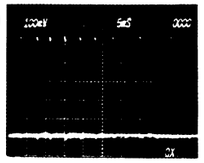

IC204 Pin (54)
Servo Clock Input terminal
(100mV/5msec)

⑯ 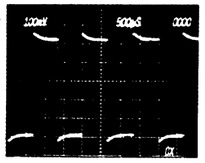

IC204 Pin (55)
CFG (Capstan Frequency
Generator)Count Down
Output terminal
(100mV/500μsec)

⑰ 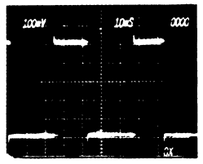

IC204 Pin (56)
Control Count Down
Output terminal
(100mV/10msec)

• VHS System IC Voltage Sheet

IC201 (M38185EEFP)

PB (REC) [V]

Pin No.	Voltage [V]	Pin No.	Voltage [V]	Pin No.	Voltage [V]
1	0.187 (0.20)	35	5.48 (5.46)	69	0.00 (0.00)
2	0.307 (4.67)	36	2.43 (2.40)	70	0.00 (0.00)
3	4.45 (4.53)	37	2.70 (2.71)	71	0.00 (0.00)
4	5.18 (5.25)	38	2.48 (2.50)	72	0.00 (0.00)
5	5.16 (5.23)	39	2.64 (2.66)	73	0.00 (0.00)
6	4.60 (4.60)	40	5.36 (0.00)	74	5.45 (5.45)
7	5.31 (5.30)	41	5.48 (5.46)	75	0.11 (0.11)
8	5.31 (5.32)	42	5.47 (5.46)	76	3.49 (3.47)
9	5.30 (5.32)	43	0.02 (5.46)	77	0.02 (0.00)
10	5.26 (5.23)	44	0.00 (0.00)	78	0.01 (0.69)
11	2.67 (2.61)	45	5.33 (0.00)	79	4.98 (5.13)
12	0.00 (0.00)	46	2.66 (5.27)	80	4.25 (4.32)
13	0.00 (0.00)	47	2.69 (2.70)	81	5.48 (5.45)
14	0.00 (0.00)	48	2.28 (5.33)	82	5.47 (0.00)
15	0.20 (0.20)	49	5.46 (5.43)	83	0.00 (5.36)
16	0.40 (0.40)	50	0.01 (0.00)	84	0.58 (5.43)
17	0.54 (0.55)	51	5.45 (0.00)	85	5.47 (5.43)
18	0.25 (0.24)	52	0.01 (1.86)	86	5.41 (5.37)
19	0.45 (0.20)	53	0.02 (5.43)	87	5.40 (5.38)
20	0.08 (0.20)	54	0.01 (5.45)	88	0.00 (0.00)
21	5.45 (5.46)	55	0.00 (0.00)	89	0.00 (0.00)
22	5.44 (5.16)	56	5.46 (0.00)	90	0.00 (0.00)
23	4.44 (0.00)	57	0.00 (5.46)	91	5.47 (3.53)
24	5.35 (5.34)	58	0.00 (0.00)	92	0.00 (0.00)
25	1.63 (1.20)	59	0.00 (0.00)	93	0.00 (0.00)
26	5.44 (5.43)	60	0.00 (0.00)	94	5.38 (5.37)
27	0.05 (0.26)	61	0.00 (5.44)	95	1.16 (0.42)
28	0.40 (0.30)	62	0.00 (5.44)	96	0.00 (0.00)
29	5.17 (0.00)	63	5.47 (5.45)	97	0.00 (0.10)
30	5.30 (5.30)	64	1.00 (1.00)	98	2.65 (0.22)
31	5.31 (5.30)	65	0.00 (0.00)	99	0.00 (0.00)
32	2.68 (2.68)	66	0.00 (0.00)	100	0.00 (0.00)
33	1.32 (0.55)	67	0.00 (0.00)		
34	2.28 (3.86)	68	0.00 (0.00)		

• VHS System TR Voltage Sheet

(PB/REC mode)

TR No. \ Port	Emitter	Collector	Base
Q202	0.00/0.00	1.33/0.00	0.00/0.00
Q203	0.00/0.00	0.00/0.00	5.40/5.34
Q204	0.64/0.64	5.28/5.23	0.98/0.96
Q205	0.65/0.65	1.32/1.33	0.00/1.23
Q206	0.00/0.00	5.29/5.28	0.00/0.00
Q208	0.00/0.00	2.71/2.69	0.00/0.00
Q209	5.32/5.28	1.13/1.15	5.41/5.37
Q210	5.29/5.28	1.15/1.15	5.41/5.37
Q211	5.12/5.10	2.72/2.70	5.40/5.37
Q212	0.00/0.00	0.12/0.12	0.64/0.64
Q213	0.92/0.95	3.60/3.59	1.47/1.46
Q217	0.00/0.00	5.19/5.20	4.83/4.80
Q218	0.00/0.00	0.00/4.77	4.80/4.77
Q221	0.00/0.00	0.00/0.00	5.40/5.40
Q222	6.13/6.12	5.92/5.90	0.00/5.34
Q223	0.00/0.00	0.10/0.10	5.39/5.37
Q224	13.34/13.33	13.25/13.23	8.51/0.00
Q225	0.92/0.95	3.60/3.59	1.47/1.46

PB (REC)

2 (5)	2.5 (2.5)	0.7 (0.7)	1.1 (1.1)	3.8 (3.8)	5 (5)	0.2 (0.9)	0 (0)	0 (0)	2.5 (2.5)	2.5 (0)	2.5 (2.5)	2.6 (2.6)	2.6 (2.6)	2.6 (2.6)	0 (0)	5 (5)	2 (3.6)	5 (5)	2.4 (2.4)	2.5 (2.5)	2.5 (2.5)	2.5 (2.5)	2.5 (2.5)	0 (0)	2.5 (2.7)	2.5 (2.1)

55 50 45 40 35 30

IC204 (HD49756NT)

1 5 10 15 20 25

3.6 (3.6)	0 (0)	0 (0)	5 (5)	0 (0)	0.2 (0.2)	2.1 (2.1)	0 (0)	2.7 (2.7)	2.7 (2.7)	2.7 (2.7)	1.4 (1.4)	2.5 (2.5)	2.5 (2.5)	2.5 (2.5)	2.5 (2.5)	2.5 (2.5)	2.4 (2.4)	0 (0)	2.5 (2.5)	2.5 (2.5)	2.5 (2.5)	2.5 (2.5)	2.5 (2.5)	2.7 (2.6)	2.7 (2.7)	5 (5)

1-2. Main System (Servo, Syscon) Circuit Diagram

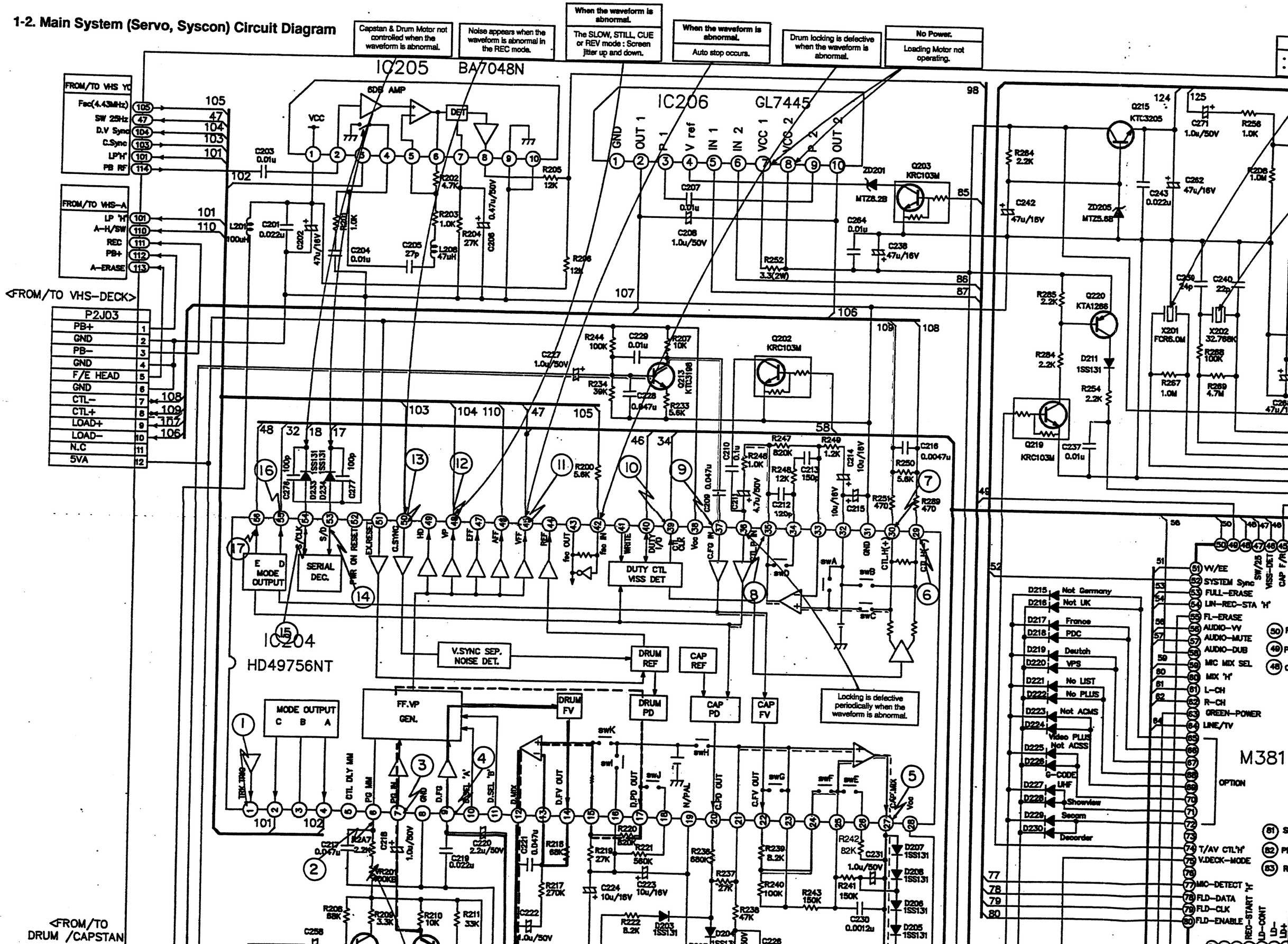

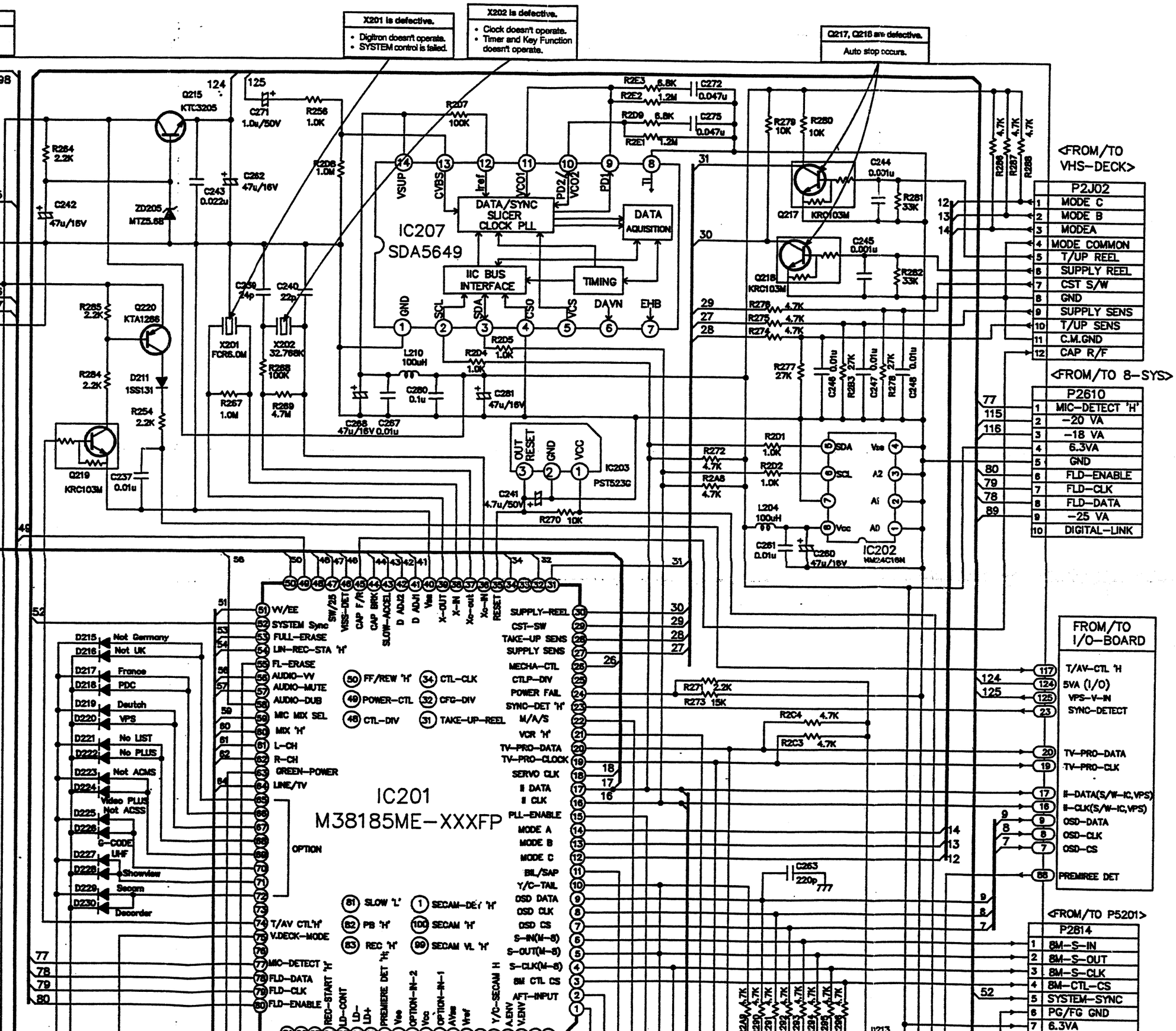

LOCATION GUIDE

C201	C10
C202	C10
C203	C11
C204	D10
C205	D10
C206	E10
C207	F11
C208	F10
C209	G8
C210	G8
C211	G8
C212	G8
C213	G8
C214	H8
C215	H8
C216	H9
C217	C5
C218	D5
C219	D5
C220	E5
C221	E5
C222	E5
C223	F5
C224	F5
C225	G4
C226	G4
C227	E9
C228	F9
C229	F9
C230	H5
C231	H5
C232	E3
C233	G3
C234	G3
C235	G3
C236	H3
C237	I9
C238	H10
C239	J10
C240	K10
C241	L9
C242	I11
C243	J11
C244	O11
C245	O10
C246	O9
C247	O9
C248	O9
C249	H4
C250	G4
C251	N4
C252	N4
C253	N4
C254	N4
C255	O4
C256	O4
C257	O3
C258	C4
C259	G3
C260	O8
C261	N8
C262	J11
C263	N6
C264	H10
C266	O2
C267	K9
C268	K9
C271	J11
C272	N12
C273	K4
C275	N11
C276	C8
C277	D8

D235	O2
IC201	K6
IC202	O8
IC203	M9
IC204	C7
IC205	D12
IC206	F11
IC207	K10
L201	C10
L203	H2
L204	N8
L205	O4
L206	O4
L207	H4
L208	D10
L210	L10
L211	P2
L212	H2
P2112	P3
P2610	P9
P2814	P5
P2J01	A4
P2J02	P11
P2J03	A10
Q201	M2
Q202	G9
Q203	H11
Q204	D4
Q205	D4
Q206	F4
Q207	N2
Q208	C3
Q209	D3
Q210	E3
Q211	F3
Q212	H3
Q213	F9
Q215	J11
Q217	N11
Q218	N10
Q219	I9
Q220	J10
Q221	N3
Q222	N3
Q223	N4
Q224	N3
R200	E8
R201	C10
R202	D11
R203	D10
R204	D10
R205	E11
R206	E10
R207	F9
R208	C5
R209	D5
R210	D5
R211	E5
R212	E4
R213	D4
R214	C4
R215	F3
R216	E4
R217	E5
R218	E5
R219	F5
R220	F5
R221	F5
R222	F5
R223	F4
R224	D3
R225	E3
R226	D4

R271	N7
R272	N9
R273	N7
R274	N10
R275	N10
R276	N10
R277	N9
R278	O9
R279	N11
R280	N11
R281	O11
R282	O10
R283	J4
R284	I9
R285	I10
R286	P11
R287	P11
R288	P11
R289	H8
R290	N5
R291	N5
R292	N5
R293	N5
R294	O5
R295	O5
R296	O5
R297	N4
R298	N4
R299	N3
R2A1	N3
R2A2	J4
R2A3	J4
R2A7	D5
R2A8	N9
R2A9	N5
R2B3	O9
R2B5	J4
R2B6	J4
R2B8	J4
R2B9	J4
R2C3	N7
R2C4	N7
R2D1	N9
R2D2	N9
R2D3	K4
R2D4	L10
R2D5	L10
R2D7	L11
R2D8	K11
R2D9	M11
R2E1	M11
R2E2	M11
R2E3	M12
R2E5	L4
VR201	D5
VR202	O4
X201	J10
X202	K10
ZD201	H11
ZD205	J11

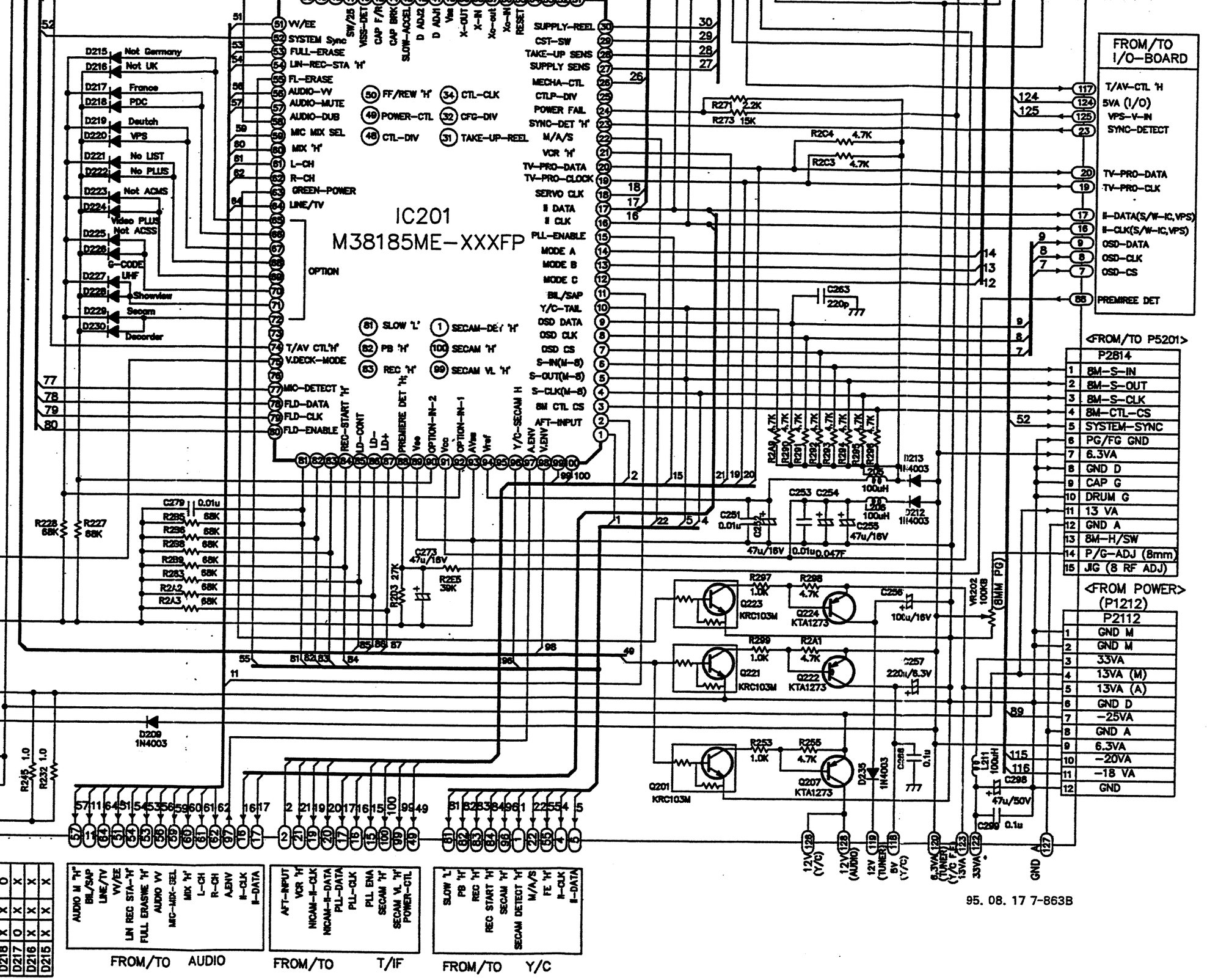

C241	L9
C242	I11
C243	J11
C244	O11
C245	O10
C246	O9
C247	O9
C248	O9
C249	H4
C250	G4
C251	N4
C252	N4
C253	N4
C254	N4
C255	O4
C256	O4
C257	O3
C258	C4
C259	G3
C260	O8
C261	N8
C262	J11
C263	N6
C264	H10
C266	O2
C267	K9
C268	K9
C271	J11
C272	N12
C273	K4
C275	N11
C276	C8
C277	D8
C278	G3
C279	J4
C280	L9
C281	L9
C298	P2
C299	P2
D202	G3
D203	F5
D204	G5
D205	H5
D206	H5
D207	H5
D208	H5
D209	J3
D211	J9
D212	O4
D213	O5
D215	I7
D216	I7
D217	I7
D218	I7
D219	I7
D220	I7
D221	I7
D222	I7
D223	I6
D224	I6
D225	I6
D226	I6
D227	I6
D228	I6
D229	I6
D230	I5
D233	C8
D234	C8

Q219	I9
Q220	J10
Q221	N3
Q222	N3
Q223	N4
Q224	N3
R200	E8
R201	C10
R202	D11
R203	D10
R204	D10
R205	E11
R206	E10
R207	F9
R208	C5
R209	D5
R210	D5
R211	E5
R212	E4
R213	D4
R214	C4
R215	F3
R216	E4
R217	E5
R218	E5
R219	F5
R220	F5
R221	F5
R222	F5
R223	F4
R224	D3
R225	E3
R226	G4
R227	I4
R228	I4
R229	H4
R230	G4
R231	H4
R232	I2
R233	F9
R234	F9
R235	F4
R236	F5
R237	G5
R238	G5
R239	G5
R240	G5
R241	H5
R242	H5
R243	G5
R244	E9
R245	I2
R246	G8
R247	G9
R248	G8
R249	G9
R250	H8
R251	H8
R252	G10
R253	N3
R254	J9
R255	N3
R256	K11
R264	I11
R267	J9
R268	K9
R269	K9
R270	M8

R2C3	N7
R2C4	N7
R2D1	N9
R2D2	N9
R2D3	K4
R2D4	L10
R2D5	L10
R2D7	L11
R2D8	K11
R2D9	M11
R2E1	M11
R2E2	M11
R2E3	M12
R2E5	L4
VR201	D5
VR202	O4
X201	J10
X202	K10
ZD201	H11
ZD205	J11

	I	J	K	L	M	N	O	P	Q
D218	X	X	X	X	X	X	X	X	O
D217	O	X	X	X	X	X	X	X	X
D216	X	X	X	X	X	X	X	X	X
D215	X	X	X	X	X	X	X	X	X

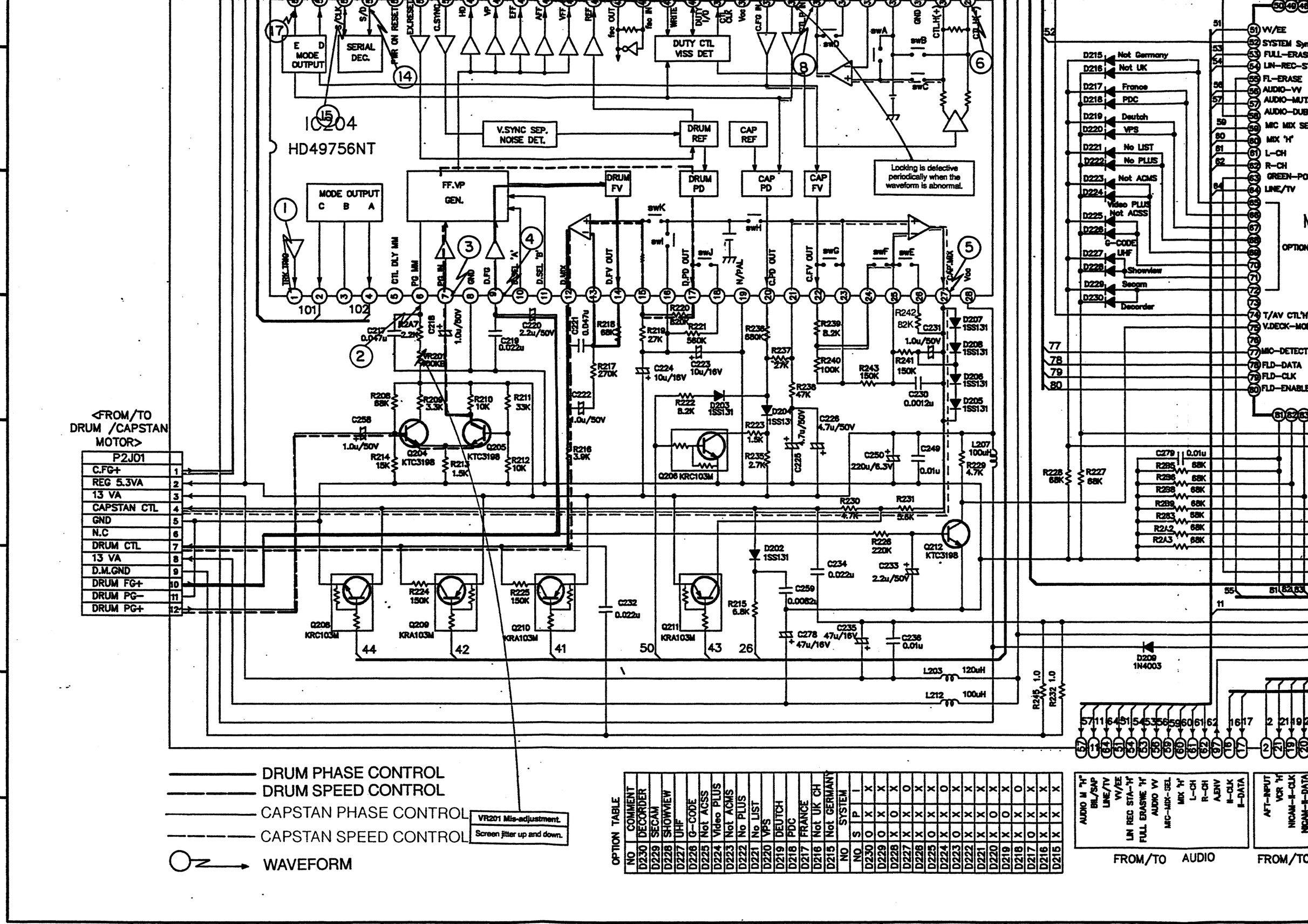
IC204
HD49756NT
E D MODE OUTPUT
SERIAL DEC.
DUTY CTL VISS DET
V.SYNC SEP. NOISE DET.
DRUM REF
CAP REF
FF.VP GEN.
DRUM FV
DRUM PD
CAP PD
CAP FV
MODE OUTPUT C B A
Locking is defective periodically when the waveform is abnormal.
<FROM/TO DRUM /CAPSTAN MOTOR>
P2J01
C.FG+
REG 5.3VA
13 VA
CAPSTAN CTL
GND
N.C
DRUM CTL
13 VA
D.M.GND
DRUM FG+
DRUM PG-
DRUM PG+
Not Germany
Not UK
France
PDC
Deutch
VPS
No LIST
No PLUS
Not ACMS
Video PLUS
Not ACSS
G-CODE
UHF
Showview
Secam
Decorder
W/EE
SYSTEM Sy
FULL-ERAS
LIN-REC-S
FL-ERASE
AUDIO-VV
AUDIO-MUT
AUDIO-DUB
MIC MIX SE
MIX 'H'
L-CH
R-CH
GREEN-PO
LINE/TV
T/AV CTL'H
V.DECK-MO
MIC-DETECT
FLD-DATA
FLD-CLK
FLD-ENABLE
OPTION
DRUM PHASE CONTROL
DRUM SPEED CONTROL
CAPSTAN PHASE CONTROL
CAPSTAN SPEED CONTROL
WAVEFORM
VR201 Mis-adjustment.
Screen jitter up and down.
OPTION TABLE
FROM/TO AUDIO
FROM/TO

1-3. Y/C Circuit Diagram

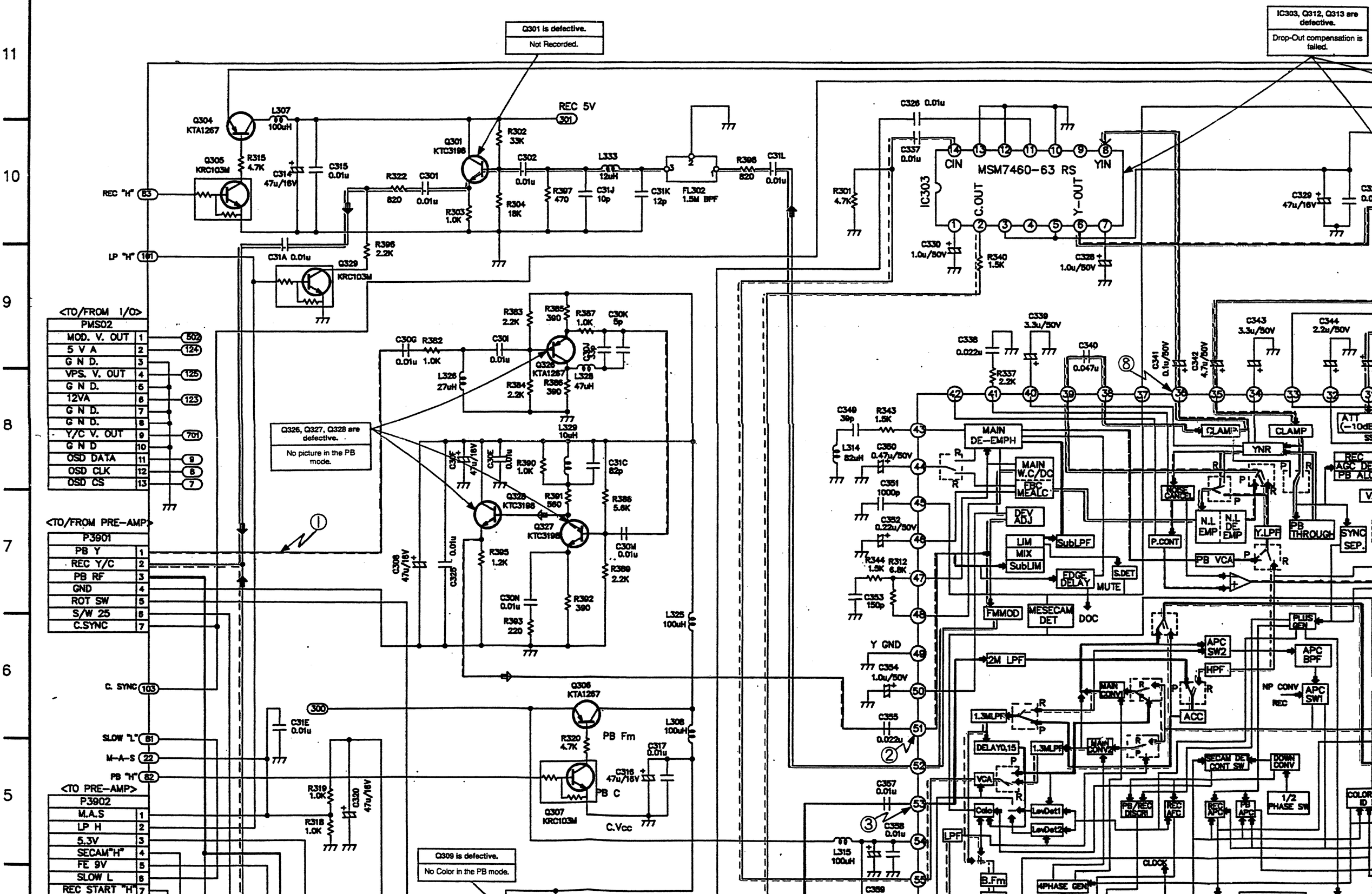

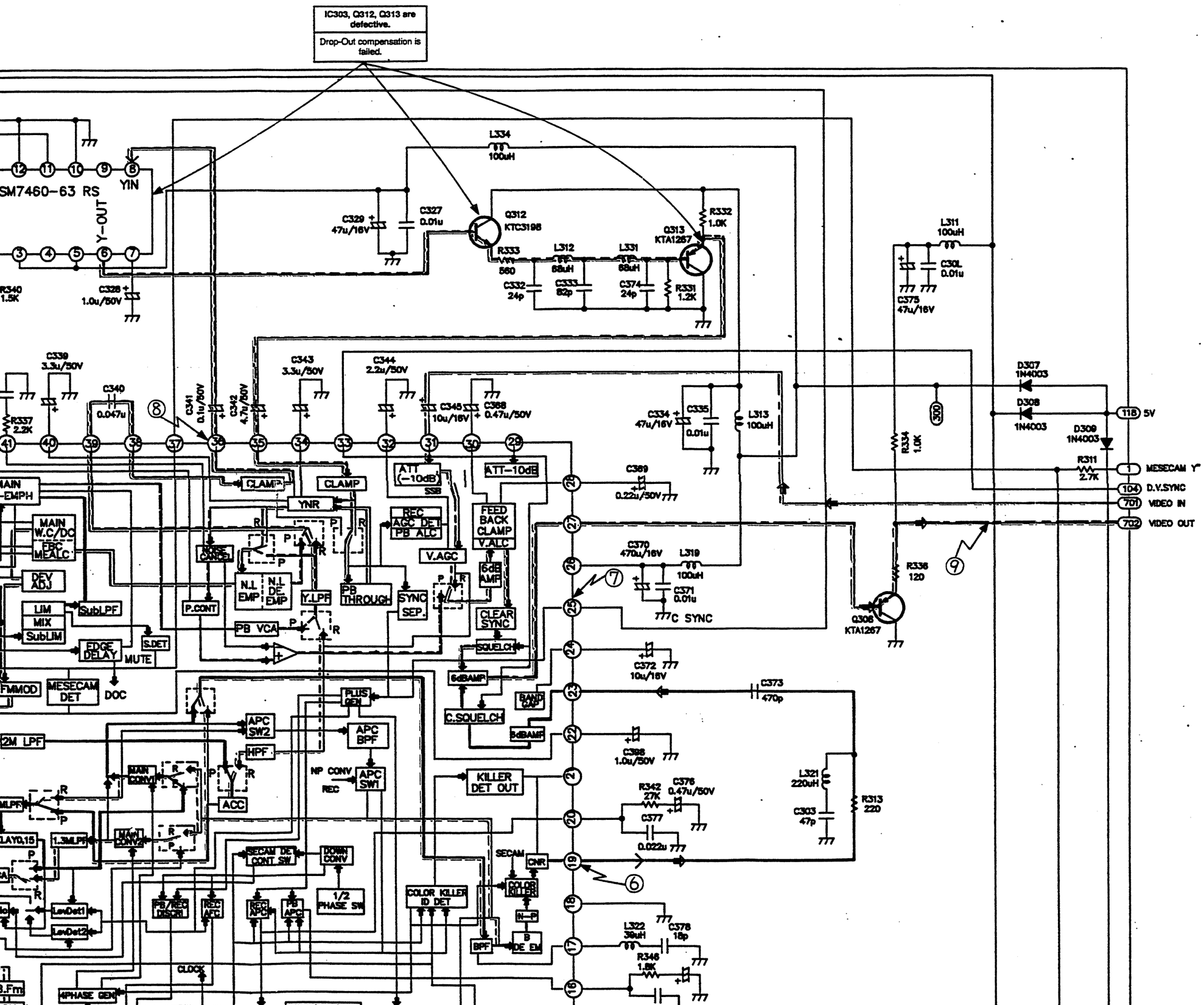

LOCATION GUIDE

C301	D10	L319	M7
C302	D10	L321	N6
C303	N6	L322	M5
C308	C7	L325	F6
C30B	B2	L326	D8
C30C	D1	L328	E8
C30E	D8	L329	E8
C30F	D8	L331	M10
C30G	C9	L333	E10
C30I	D9	L334	L10
C30J	E9	P3901	A7
C30K	E9	P3902	A5
C30L	D9	PMS02	A9
C30M	E7	PMS03	A3
C30N	D7	Q301	D10
C312	G3	Q302	F2
C314	B10	Q304	B10
C315	C10	Q305	B10
C316	E5	Q306	E6
C317	E5	Q307	E5
C318	E3	Q308	N7
C31A	B9	Q309	E4
C31C	E8	Q310	G3
C31E	C6	Q311	P2
C31H	E2	Q312	L10
C31J	E10	Q313	M10
C31K	E10	Q315	M3
C31L	F10	Q320	J2
C320	C5	Q323	D2
C323	D4	Q324	C2
C324	M2	Q325	B2
C325	D7	Q326	E9
C326	G11	Q327	E7
C327	K10	Q328	D7
C328	I9	Q329	C9
C329	K10	R301	G10
C330	H9	R302	D10
C332	L9	R303	D10
C333	L9	R304	D10
C334	M8	R306	G2
C335	M9	R307	F2
C336	F2	R308	F2
C337	G10	R309	O2
C338	H9	R311	P8
C339	H9	R312	G7
C340	I9	R313	N6
C341	I9	R315	B10
C342	J9	R316	B4
C343	J9	R317	B4
C344	K9	R318	C5
C345	K9	R319	C5
C349	G8	R320	E5
C350	G8	R321	F4
C351	G8	R322	C10
C352	G7	R323	E4
C353	G7	R324	D4
C354	G6	R325	D3
C355	G6	R326	E3
C357	G5	R328	H2
C358	G5	R329	H4
C359	G4	R331	M9
C360	H4	R332	M10
C361	I4	R333	L10
C362	I3	R334	O8
C363	J4	R336	O7
C364	I3	R337	H8
C365	J3	R340	H9
C366	K3	R342	M6
C367	L3	R343	G8
C368	L9	R344	G7
C369	M8	R345	I4
C370	M8	R346	M5

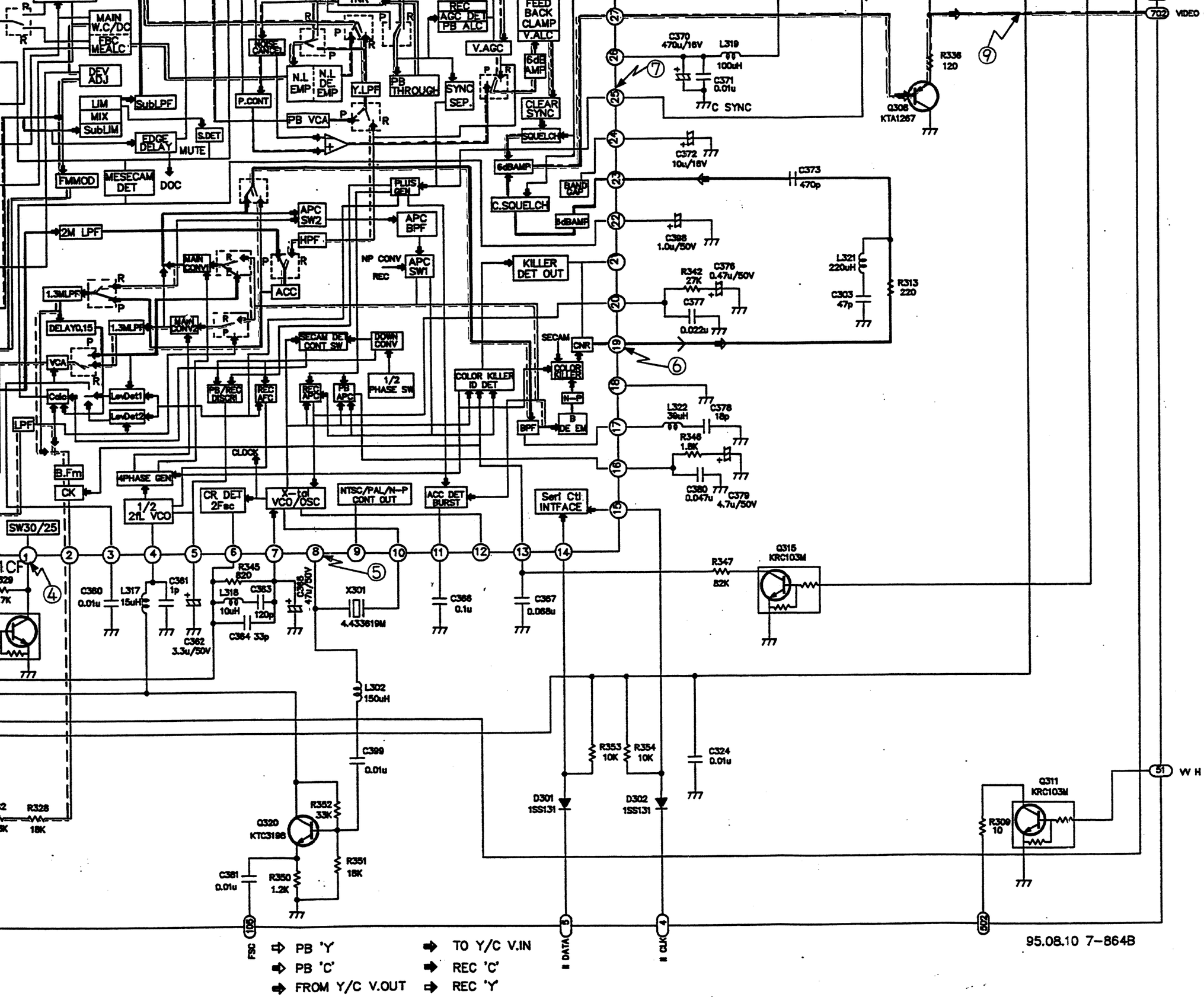

C332	L9	R303	D10
C333	L9	R304	D10
C334	M8	R306	G2
C335	M9	R307	F2
C336	F2	R308	F2
C337	G10	R309	O2
C338	H9	R311	P8
C339	H9	R312	G7
C340	I9	R313	N6
C341	I9	R315	B10
C342	J9	R316	B4
C343	J9	R317	B4
C344	K9	R318	C5
C345	K9	R319	C5
C349	G8	R320	E5
C350	G8	R321	F4
C351	G8	R322	C10
C352	G7	R323	E4
C353	G7	R324	D4
C354	G6	R325	D3
C355	G6	R326	E3
C357	G5	R328	H2
C358	G5	R329	H4
C359	G4	R331	M9
C360	H4	R332	M10
C361	I4	R333	L10
C362	I3	R334	O8
C363	J4	R336	O7
C364	I3	R337	H8
C365	J3	R340	H9
C366	K3	R342	M6
C367	L3	R343	G8
C368	L9	R344	G7
C369	M8	R345	I4
C370	M8	R346	M5
C371	M7	R347	M4
C372	M7	R350	J1
C373	N7	R351	J2
C374	M9	R352	J2
C375	N10	R353	L2
C376	M6	R354	L2
C377	M6	R359	E4
C378	M5	R361	F2
C379	M4	R362	H2
C380	M4	R379	D2
C381	I1	R382	D9
C394	G2	R383	D9
C398	M6	R384	D8
C399	J2	R385	E9
D301	L2	R386	E8
D302	L2	R387	E9
D307	O9	R388	E7
D308	O9	R389	E7
D309	P8	R390	D8
FL301	E4	R391	E7
IC301	G4	R392	E7
IC303	H10	R393	D6
L302	J3	R395	D7
L307	B11	R396	C9
L308	F6	R397	E10
L311	O10	R398	F10
L312	L10	X301	J4
L313	M8	ZD304	D1
L314	G8		
L315	G5		
L316	G4		
L317	I4		
L318	I4		

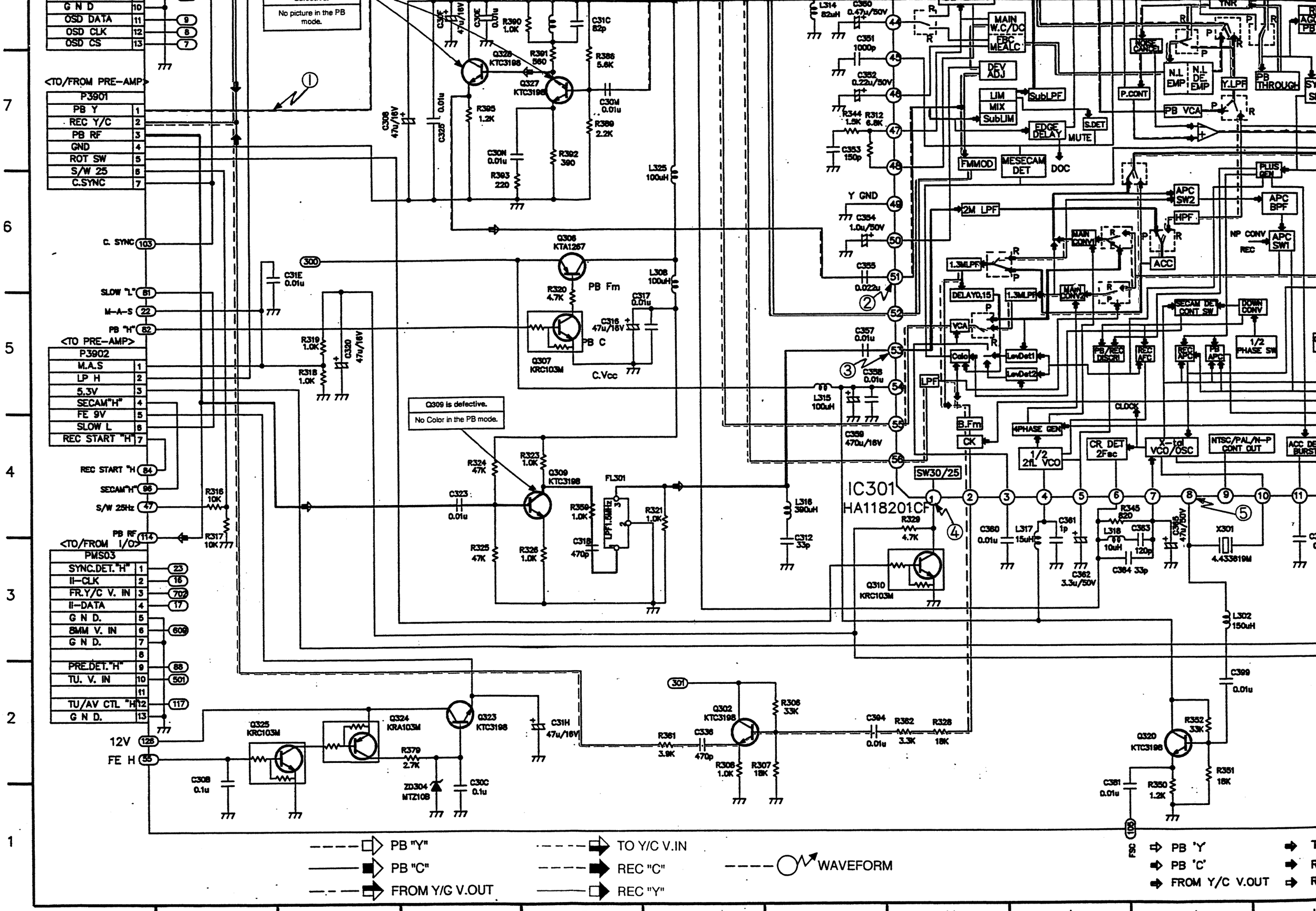
G N D 10
OSD DATA 11
OSD CLK 12
OSD CS 13
No picture in the PB mode.
<TO/FROM PRE-AMP>
P3901
PB Y 1
REC Y/C 2
PB RF 3
GND 4
ROT SW 5
S/W 25 6
C.SYNC 7
C. SYNC 103
SLOW "L" 81
M-A-S 22
PB "H" 82
<TO PRE-AMP>
P3902
M.A.S 1
LP H 2
5.3V 3
SECAM"H" 4
FE 9V 5
SLOW L 6
REC START "H" 7
REC START "H 84
SECAM"H" 96
S/W 25Hz 47
PB RF 114
<TO/FROM I/O>
PMS03
SYNC.DET."H" 1
II-CLK 2
FR.Y/C V. IN 3
II-DATA 4
G N D. 5
8MM V. IN 6
G N D. 7
8
PRE.DET."H" 9
TU. V. IN 10
11
TU/AV CTL "H" 12
G N D. 13
12V 126
FE H 55
Q328 KTC3198
Q327 KTC3198
Q306 KTA1267
PB Fm
PB C
Q307 KRC103M
C.Vcc
Q309 is defective.
No Color in the PB mode.
Q309 KTC3198
FL301
LPF1.5MHz
Q325 KRC103M
Q324 KRA103M
Q323 KTC3198
ZD304 MTZ10B
Q302 KTC3198
Q320 KTC3198
IC301
HA118201CF
Q310 KRC103M
X301 4.433619M
MAIN W.C/DC
FBC MEALC
DEV ADJ
LIM
MIX
SubLIM
SubLPF
EDGE DELAY
MUTE
S.DET
DOC
FMMOD
MESECAM DET
Y GND
2M LPF
HPF
APC SW2
APC BPF
APC SW1
PLUS GEN
MAIN CONV1
MAIN CONV2
1.3MLPF
DELAY0.15
VCA
ACC
LPF
B.Fm
CK
4PHASE GEN
1/2 2fL VCO
CR DET 2Fsc
X-tal VCO/OSC
NTSC/PAL/N-P CONT OUT
ACC DET BURST
1/2 PHASE SW
DOWN CONV
SECAM DET CONT SW
PB/REC DISCRI
REC AFC
REC APC
PB APC
CLOCK
SW30/25
N.L EMP
N.L DE EMP
Y.LPF
PB THROUGH
P.CONT
PB VCA
NOISE CANCEL
TNR
PB 'Y'
PB 'C'
FROM Y/C V.OUT
PB "Y"
PB "C"
FROM Y/G V.OUT
TO Y/C V.IN
REC "C"
REC "Y"
WAVEFORM
A
B
C
D
E
F
G
H
I
J

• VHS Y/C Waveform

① 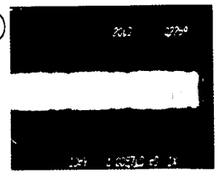
P3901 Pin 1
(10mV/20μsec)

②
IC301 Pin 51
(50mV/5msec)

③
IC301 Pin 53
(5mV/20μsec)

④
IC301 Pin 1
(200mV/5msec)

⑤ 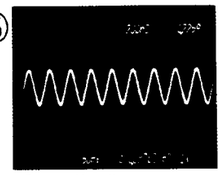
IC301 Pin 8
(50mV/200nsec)

⑥
IC301 Pin 19
(20mV/20μsec)

⑦ 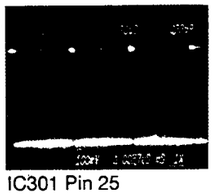
IC301 Pin 25
(100mV/20μsec)

⑧ 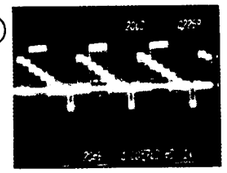
IC301 Pin 36
(20mV/20μsec)

⑨
Video Out Terminal
(100mV/20μsec)

• VHS Y/C TR Voltage Sheet

(PB/REC mode)

Port / TR No.	Emitter	Collector	Base
Q301	0/1.09	0/4.9	0/1.66
Q308	2.97/2.21	0/0	0.02/0.1
Q312	0.04/3.4	4.89/0.04	3.66/0.05
Q313	1.51/1.7	0/0	2.14/2.28
Q326	3.15/0	1.76/0	2.49/0
Q327	1.34/0	2.57/0	0.74/0
Q328	1.97/0	4.9/0	2.58/0

• VHS Y/C IC Voltage Sheet

PB (REC)

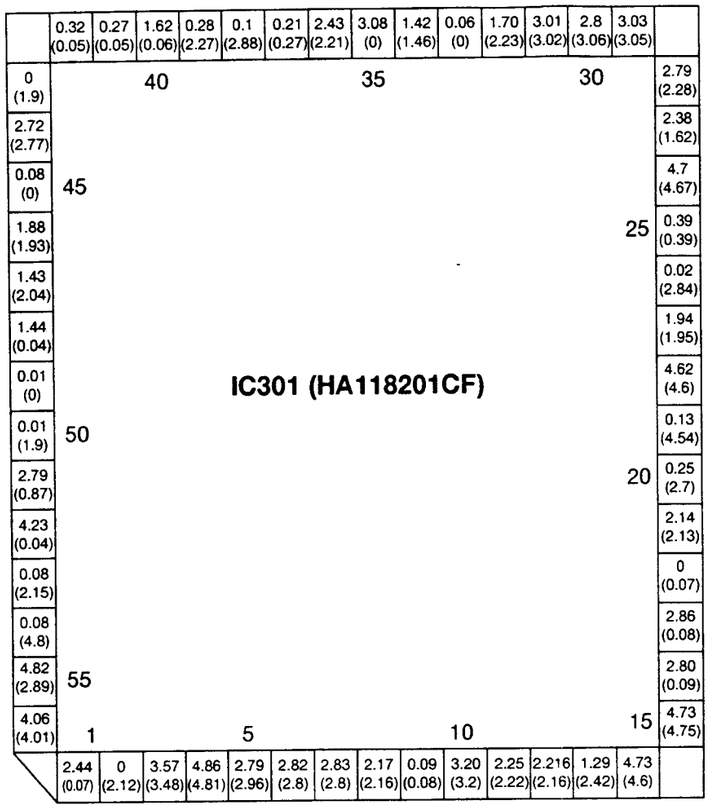

PB (REC)

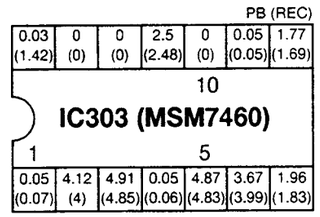

1-4. Timer/Key Function Circuit Diagram

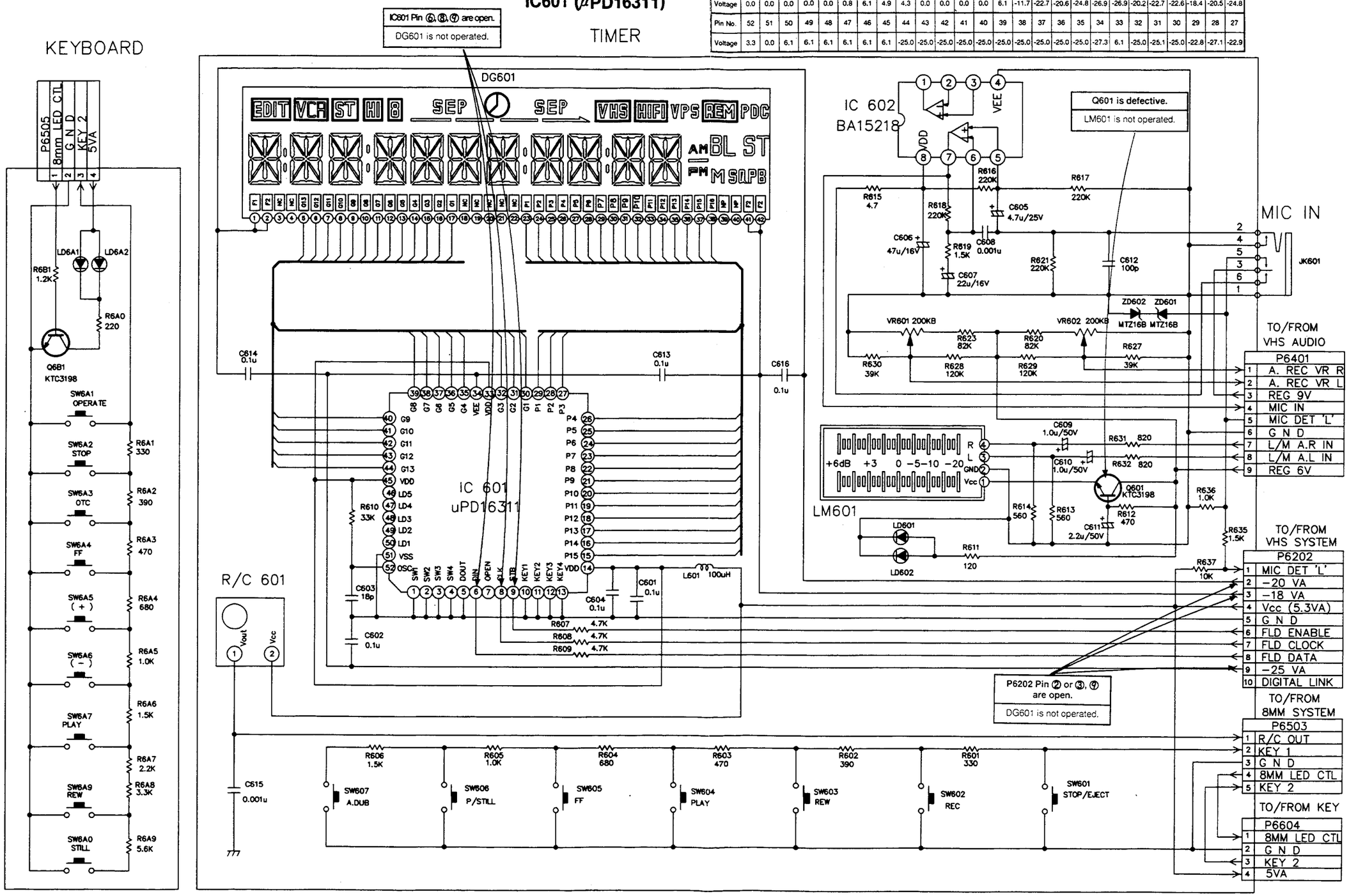

* Timer IC Voltage Sheet
IC601 (μPD16311)

Pin No.	1	2	3	4	5	6	7	8	9	10	11	12	13	14	15	16	17	18	19	20	21	22	23	24	25	26
Voltage	0.0	0.0	0.0	0.0	0.0	0.8	6.1	4.9	4.3	0.0	0.0	0.0	0.0	6.1	-11.7	-22.7	-20.6	-24.8	-26.9	-26.9	-20.2	-22.7	-22.6	-18.4	-20.5	-24.8
Pin No.	52	51	50	49	48	47	46	45	44	43	42	41	40	39	38	37	36	35	34	33	32	31	30	29	28	27
Voltage	3.3	0.0	6.1	6.1	6.1	6.1	6.1	6.1	-25.0	-25.0	-25.0	-25.0	-25.0	-25.0	-25.0	-25.0	-25.0	-25.0	-27.3	6.1	-25.0	-25.1	-25.0	-22.8	-27.1	-22.9

LOCATION GUIDE

C601	F3
C602	D3
C603	D3
C604	E3
C605	I6
C606	H6
C607	H6
C608	I6
C609	I5
C610	I4
C611	I4
C612	J6
C613	F5
C614	C5
C615	C2
C616	G5
IC602	H7
JK601	K6
L601	F3
LD601	H4
LD602	H3
LD6A1	A6
LD6A2	B6
Q601	J4
Q6B1	A5
RC601	B3
R601	H2
R602	G2
R603	F2
R604	F2
R605	E2
R606	D2
R607	E3
R608	E3
R609	E3
R610	D4
R611	H4
R612	J4
R613	I4
R614	I4
R615	H6
R616	I7
R617	I7
R618	H6
R619	H6
R620	I5
R621	I6
R623	H5
R627	J5
R628	H5
R629	I5
R630	H5
R631	J4
R632	J4
R635	K4
R636	J4
R637	J3
R6A0	B5
R6A1	B4
R6A2	B4
R6A3	B4
R6A4	B3
R6A5	B3
R6A6	B2
R6A7	B2
R6A8	B2
R6A9	B1
R6B1	A6
SW601	I2
SW602	H2
SW603	G2
SW604	F2
SW605	E2
SW606	D2
SW607	C2
SW6A0	A1
SW6A1	A5
SW6A2	A4
SW6A3	A4
SW6A4	A4
SW6A5	A3
SW6A6	A3
SW6A7	A2
SW6A9	A2
VR601	H5
VR602	I5
ZD601	J6
ZD602	J6

1-5. Audio Circuit Diagram

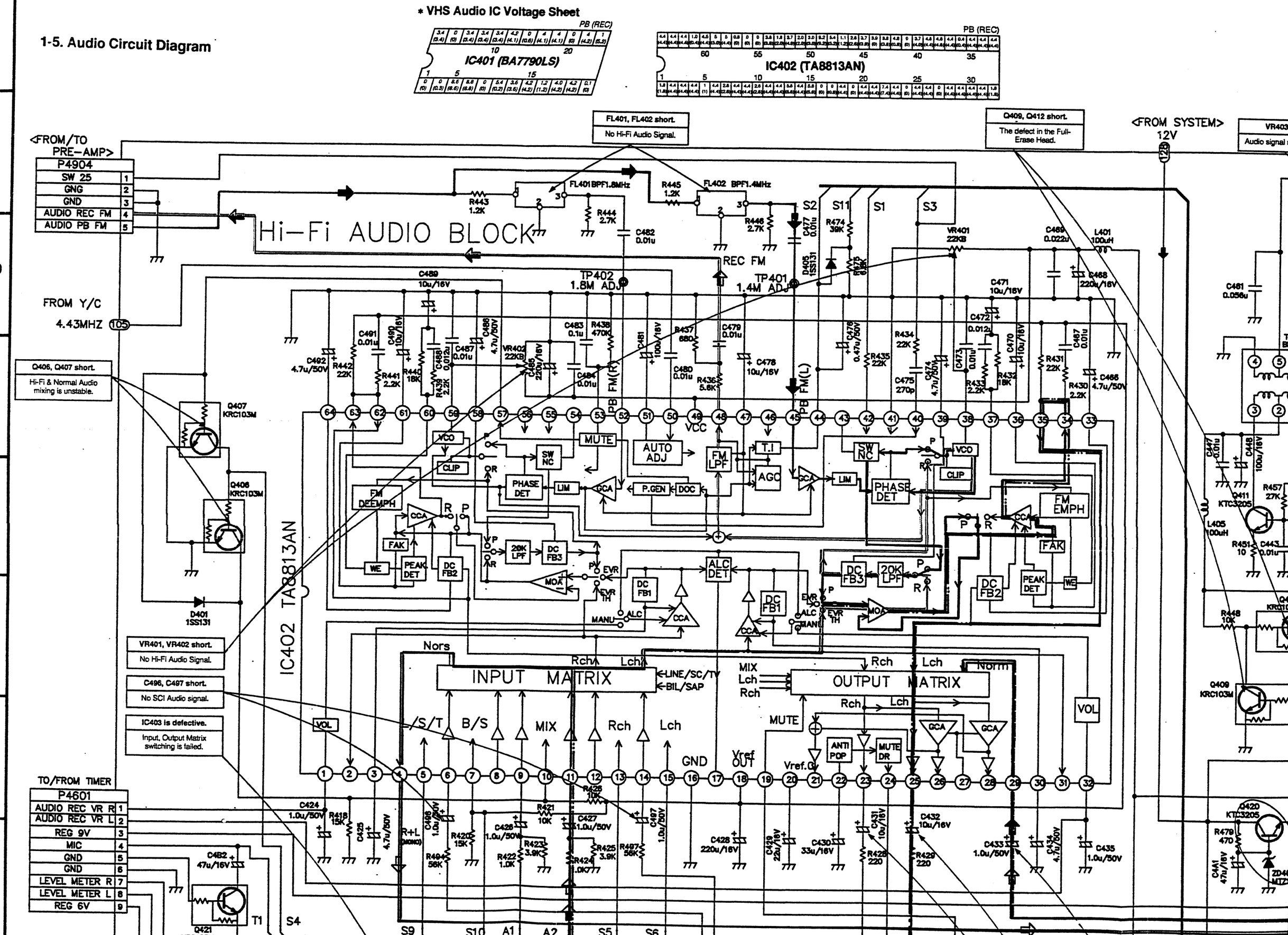

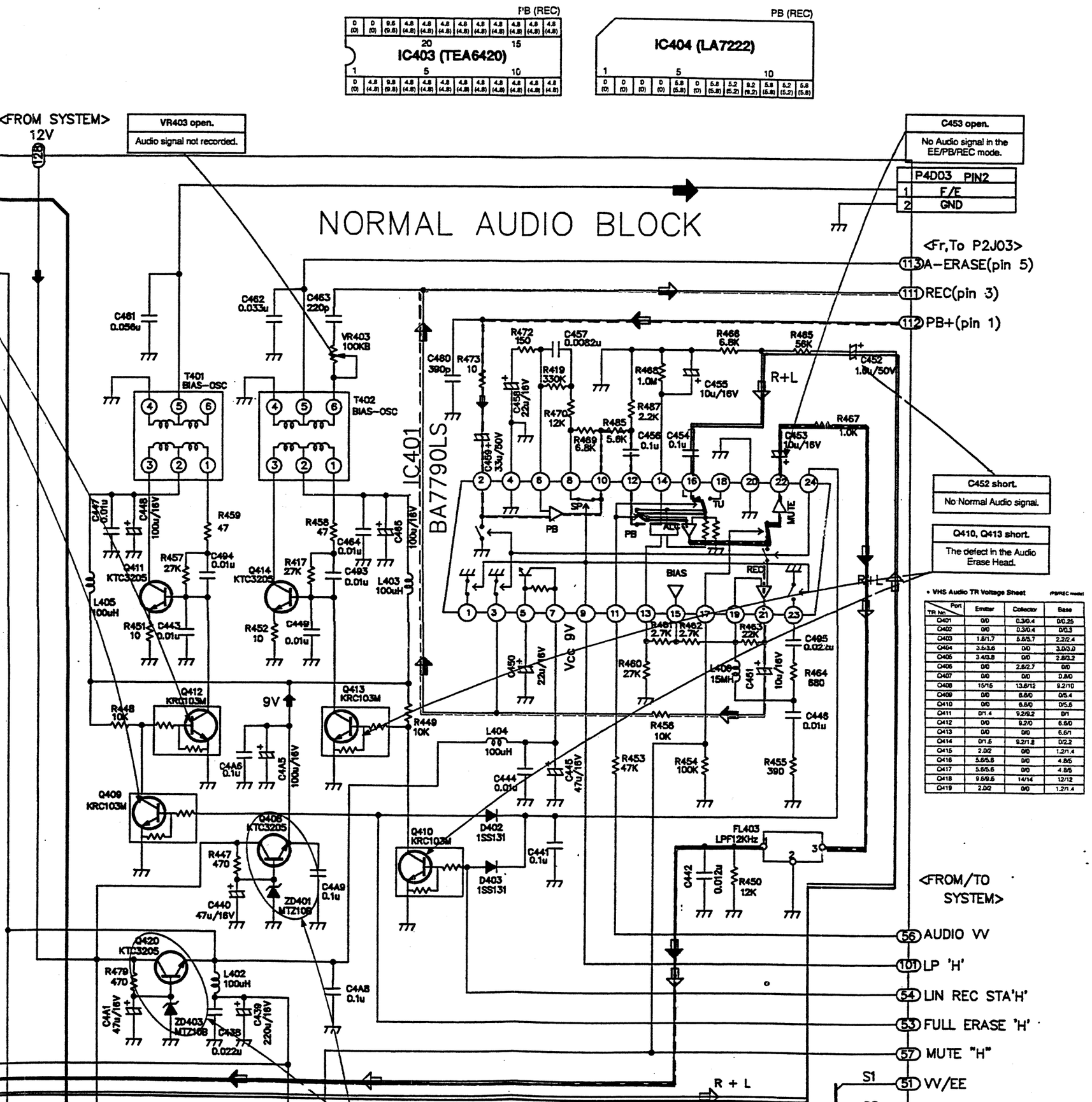

* VHS Audio TR Voltage Sheet (PB/REC model)

TR No. \ Port	Emitter	Collector	Base
Q401	0/0	0.3/0.4	0/0.25
Q402	0/0	0.3/0.4	0/0.3
Q403	1.8/1.7	5.6/5.7	2.2/2.4
Q404	3.5/3.6	0/0	3.0/3.0
Q405	3.4/3.8	0/0	2.8/3.2
Q406	0/0	2.8/2.7	0/0
Q407	0/0	0/0	0.8/0
Q408	15/15	13.6/12	9.2/10
Q409	0/0	6.6/0	0/5.4
Q410	0/0	6.6/0	0/5.6
Q411	0/1.4	9.2/9.2	0/1
Q412	0/0	9.2/0	6.6/0
Q413	0/0	0/0	6.6/1
Q414	0/1.6	9.2/1.8	0/2.2
Q415	2.0/2	0/0	1.2/1.4
Q416	5.6/5.6	0/0	4.8/5
Q417	5.6/5.6	0/0	4.8/5
Q418	9.6/9.6	14/14	12/12
Q419	2.0/2	0/0	1.2/1.4

LOCATION GUIDE

C401	B4
C402	B4
C403	B4
C404	B4
C405	B3
C406	B3
C407	B3
C408	B3
C409	D2
C410	C1
C411	E2
C412	B2
C413	B2
C414	D4
C415	E4
C416	E4
C417	H3
C418	L3
C419	J3
C420	K3
C422	M3
C423	O3
C424	C6
C425	C5
C426	D5
C427	E6
C428	F5
C429	G5
C430	G5
C431	H6
C432	H6
C433	H5
C434	I5
C435	I5
C436	H3
C437	I3
C438	K5
C439	K5
C440	K6
C441	M6
C442	N6
C443	K8
C444	M7
C445	N7
C446	O7
C447	J9
C448	K9
C449	L8
C450	M8
C451	O7
C452	O10
C453	O9
C454	N9
C455	N10
C456	N9
C457	M10
C458	M9
C459	M9
C460	M10
C461	J10
C462	K10
C463	L10
C464	L8
C465	L8
C466	I9
C467	I10
C468	I10
C469	I10
C470	I9
C471	H10
C472	H10
C473	H9
C474	H9
C475	H9
C476	G10

FL401	E11
FL402	F11
FL403	O7
IC401	L9
IC403	D2
IC404	I4
IC402	C7
L401	I10
L402	K5
L403	L8
L404	M7
L405	J8
L406	N8
L407	B2
L408	H4
L409	J4
P4601	A6
P4904	A11
P4D03	P11
PMS01	A3
PV402	P2
Q401	G4
Q402	H4
Q403	H3
Q404	M3
Q405	N3
Q406	B8
Q407	B9
Q408	K7
Q409	J7
Q410	L6
Q411	J8
Q412	K7
Q413	L7
Q414	K8
Q415	M3
Q416	G3
Q417	G2
Q418	B2
Q419	N3
Q420	K6
Q421	B5
R401	G4
R402	G4
R403	H2
R404	I2
R405	H3
R406	I3
R407	M3
R408	M4
R409	M4
R40A	L4
R40B	L3
R410	M3
R411	B2
R412	N3
R413	N3
R414	O4
R415	O4
R416	O3
R417	L8
R418	C6
R419	M10
R420	D5
R421	E6
R422	E5
R423	E5
R424	E5
R425	E5
R426	E6
R427	N4
R428	H5
R429	H5
R430	I9
R431	I9

R471	D4
R472	M10
R473	M10
R474	G10
R475	G10
R476	C3
R478	C3
R479	J5
R480	B3
R482	B3
R484	B4
R485	N9
R486	B4
R487	N9
R488	D4
R489	G3
R490	G3
R491	G3
R492	G2
R494	D5
R495	N4
R496	M3
R497	F5
R498	N2
R499	N2
T401	K10
T402	L9
TP401	G10
TP402	E10
VR401	H10
VR402	E9
VR403	L10
ZD401	L6
ZD402	B1
ZD403	K5

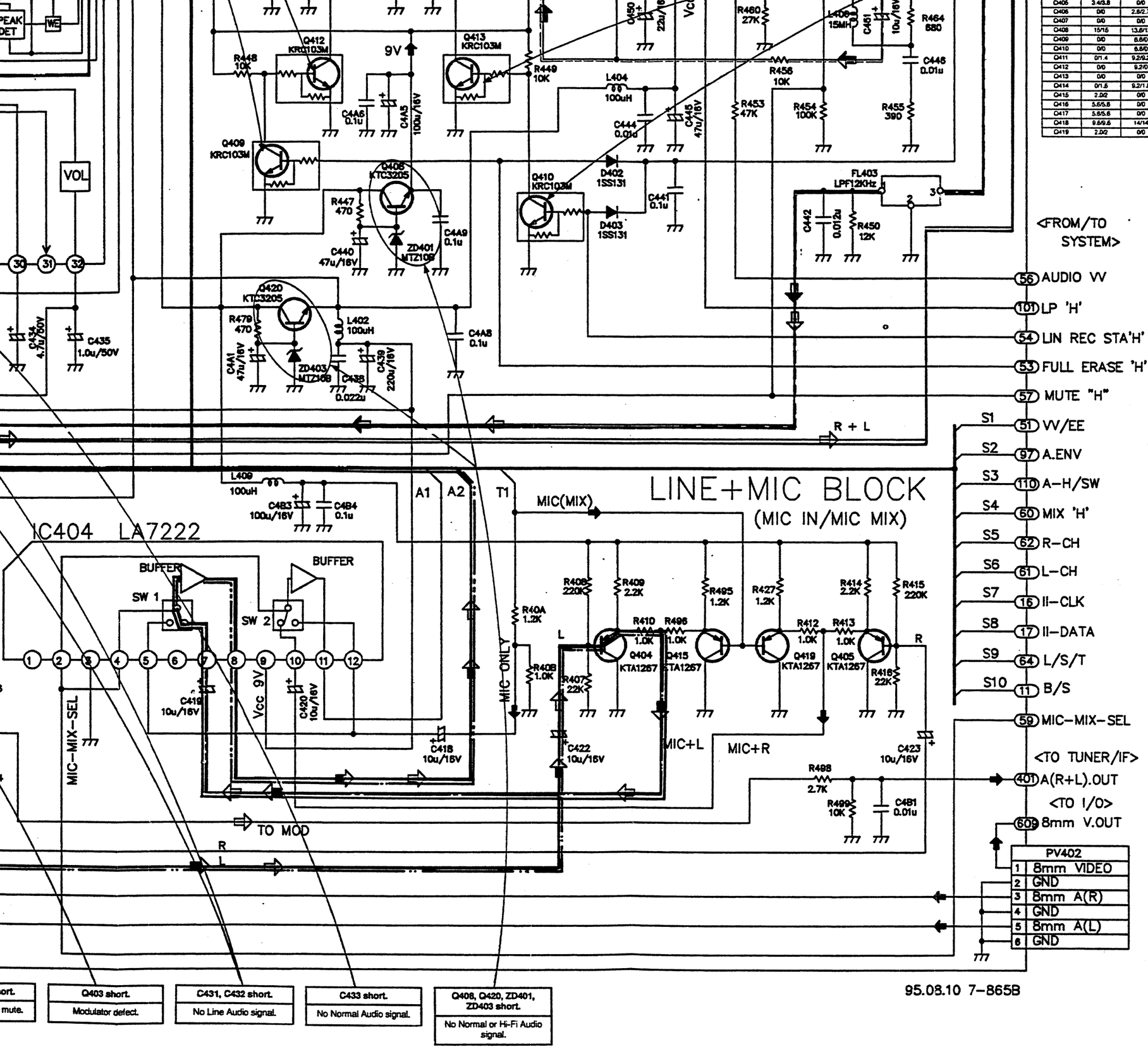

Q403 short.	Modulator defect.	C431, C432 short.	No Line Audio signal.
C433 short.	No Normal Audio signal.	Q408, Q420, ZD401, ZD403 short.	No Normal or Hi-Fi Audio signal.

C447	J9	R404	I2
C448	K9	R405	H3
C449	L8	R406	I3
C450	M8	R407	M3
C451	O7	R408	M4
C452	O10	R409	M4
C453	O9	R40A	L4
C454	N9	R40B	L3
C455	N10	R410	M3
C456	N9	R411	B2
C457	M10	R412	N3
C458	M9	R413	N3
C459	M9	R414	O4
C460	M10	R415	O4
C461	J10	R416	O3
C462	K10	R417	L8
C463	L10	R418	C6
C464	L8	R419	M10
C465	L8	R420	D5
C466	I9	R421	E6
C467	I10	R422	E5
C468	I10	R423	E5
C469	I10	R424	E5
C470	I9	R425	E5
C471	H10	R426	E6
C472	H10	R427	N4
C473	H9	R428	H5
C474	H9	R429	H5
C475	H9	R430	I9
C476	G10	R431	I9
C477	G10	R432	I9
C478	G9	R433	H9
C479	F10	R434	H10
C480	F9	R435	H9
C481	F9	R436	F9
C482	F10	R437	F10
C483	E10	R438	E10
C484	E9	R439	D9
C485	E9	R440	D9
C486	D10	R441	D9
C487	D9	R442	C9
C488	D9	R443	D11
C489	D10	R444	E11
C490	D9	R445	F11
C491	C10	R446	G10
C492	C9	R447	K6
C493	L8	R448	J7
C494	K8	R449	L7
C495	O8	R450	O6
C496	D5	R451	J8
C497	F6	R452	K8
C498	A1	R453	N7
C499	B1	R454	N7
C4A1	J5	R455	O7
C4A2	G4	R456	N7
C4A3	C4	R457	K8
C4A4	B3	R458	L9
C4A5	L7	R459	K9
C4A6	K7	R460	N8
C4A8	L5	R461	N8
C4A9	L6	R462	N8
C4B1	O2	R463	O8
C4B2	B5	R464	O8
C4B3	K4	R465	O10
C4B4	K4	R466	N10
D401	B7	R467	O9
D402	M7	R468	N10
D403	M6	R469	N9
D405	G10	R470	M9

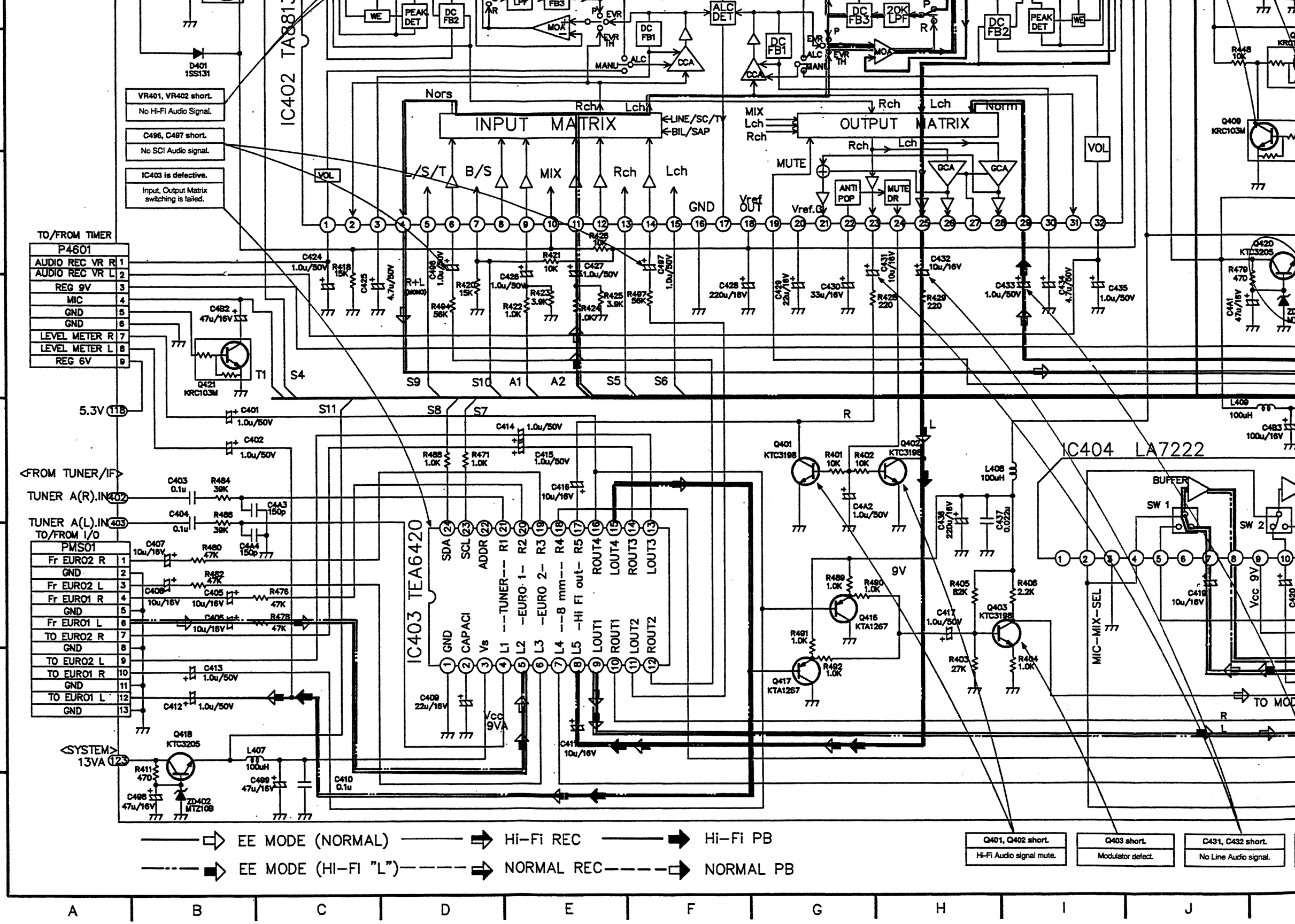
IC402 TA8813
INPUT MATRIX
OUTPUT MATRIX
LINE/SC/TV
BIL/SAP
/S/T
B/S
MIX
Rch
Lch
GND
Vref OUT
Vref.G
MUTE
ANTI POP
MUTE DR
GCA
VOL
TO/FROM TIMER
P4601
AUDIO REC VR R
AUDIO REC VR L
REG 9V
MIC
GND
LEVEL METER R
LEVEL METER L
REG 6V
5.3V
<FROM TUNER/IF>
TUNER A(R).IN
TUNER A(L).IN
TO/FROM I/O
PMS01
Fr EURO2 R
Fr EURO2 L
Fr EURO1 R
Fr EURO1 L
TO EURO2 R
TO EURO2 L
TO EURO1 R
TO EURO1 L
<SYSTEM>
13VA
IC403 TEA6420
SDA
SCL
ADDR
R1
R2
R3
R4
R5
ROUT4
LOUT4
ROUT3
LOUT3
GND
CAPACI
Vs
L1
L2
L3
L4
L5
LOUT1
ROUT1
LOUT2
ROUT2
Vcc 9VA
IC404 LA7222
BUFFER
SW 1
SW 2
MIC-MIX-SEL
Vcc 9V
TO MOD
9V
EE MODE (NORMAL)
Hi-Fi REC
Hi-Fi PB
EE MODE (HI-FI "L")
NORMAL REC
NORMAL PB
VR401, VR402 short.
No Hi-Fi Audio Signal.
C496, C497 short.
No SCI Audio signal.
IC403 is defective.
Input, Output Matrix switching is failed.
Q401, Q402 short.
Hi-Fi Audio signal mute.
Q403 short.
Modulator defect.
C431, C432 short.
No Line Audio signal.

1-6. Tuner/IF Circuit Diagram

• Tuner/IF IC Voltage Sheet

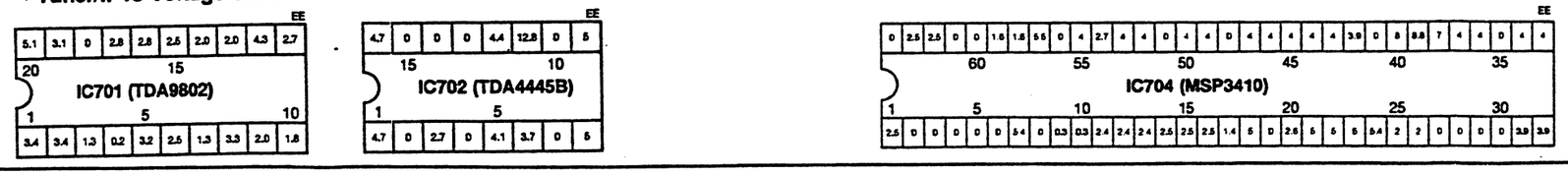

• Tuner/IF TR Voltage Sheet

TR No. \ Port	Emitter	Colle
Q701	2.2	1
Q703	1.2	1

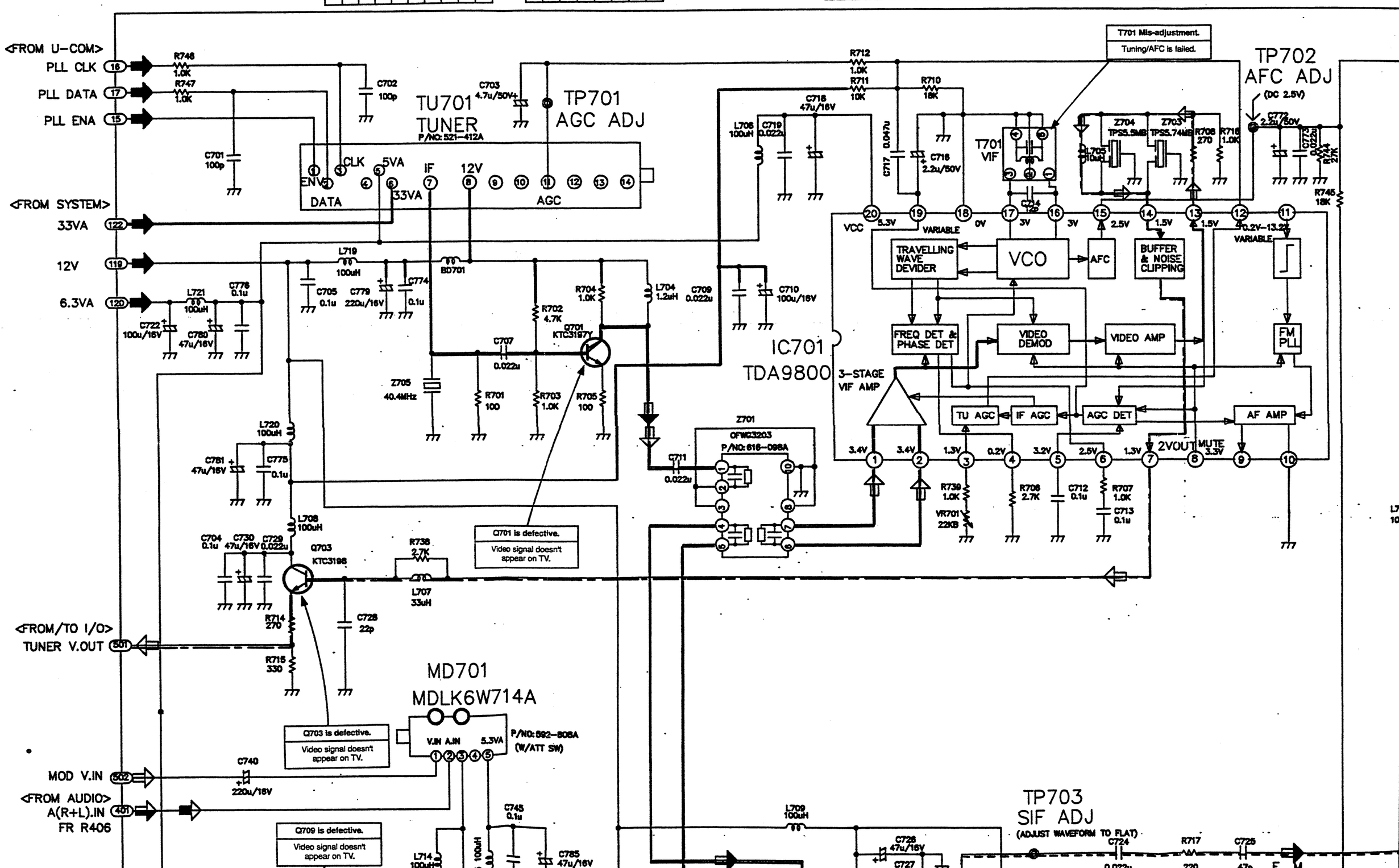

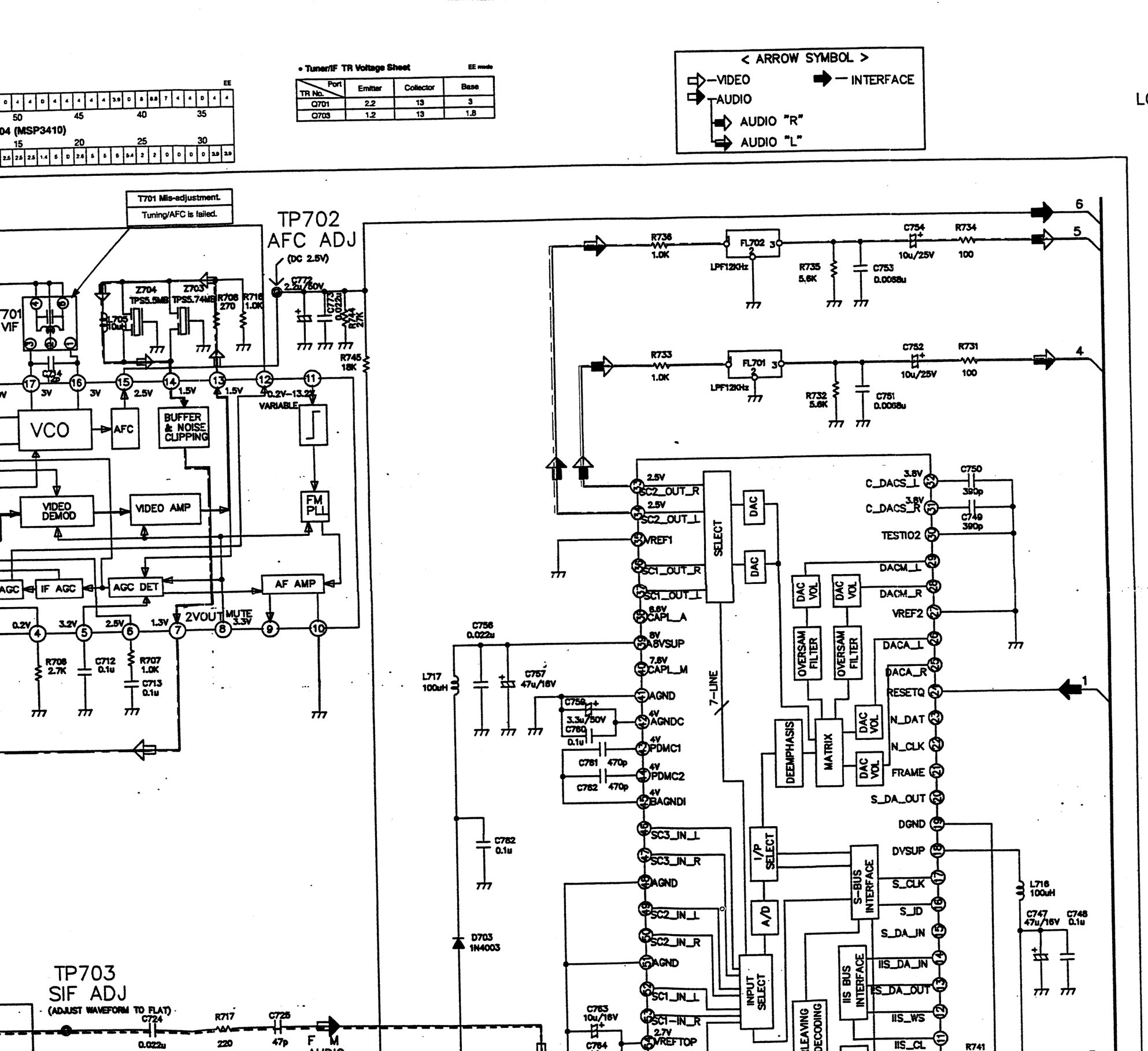

• Tuner/IF TR Voltage Sheet

TR No. \ Port	Emitter	Collector	Base
Q701	2.2	13	3
Q703	1.2	13	1.8

< ARROW SYMBOL >

- VIDEO
- AUDIO
  - AUDIO "R"
  - AUDIO "L"
- INTERFACE

LOCATION GUIDE

BD701	D9
C701	B10
C702	C11
C703	D11
C704	B7
C705	C9
C707	D9
C709	F9
C710	G9
C711	F8
C712	I7
C713	I7
C714	H10
C716	H10
C717	G10
C718	G10
C719	F10
C720	G3
C721	H3
C722	B9
C724	I5
C725	J5
C726	G5
C727	G5
C728	C6
C729	C7
C730	B7
C740	B5
C741	F2
C742	C4
C743	D4
C744	D4
C745	D5
C747	P5
C748	P5
C749	O8
C750	O9
C751	O9
C752	O10
C753	O10
C754	O11
C756	L8
C757	L7
C759	L7
C760	L7
C761	L7
C762	L6
C763	L5
C764	L4
C765	L4
C766	L3
C767	L3
C768	L3
C769	L2
C770	D2
C772	J10
C773	K10
C774	D9
C775	C8
C776	B9
C779	C9
C780	B9
C781	B8
C782	L6
C784	J7
C785	E5
D703	L5
FL701	N10
FL702	N10
IC701	G8

R714	C6
R715	C6
R716	J10
R717	J5
R729	C4
R730	C4
R731	O10
R732	N9
R733	M10
R734	O11
R735	N10
R736	M11
R737	D3
R738	D7
R739	H7
R740	O4
R741	O4
R744	K10
R745	K10
R746	B11
R747	B11
T701	H10
T702	J3
TP701	E10
TP702	J11
TP703	H5
TU701	D10
VR701	H7
X701	M3
Z701	F8
Z703	I10
Z704	I10
Z705	D8
ZD701	C2

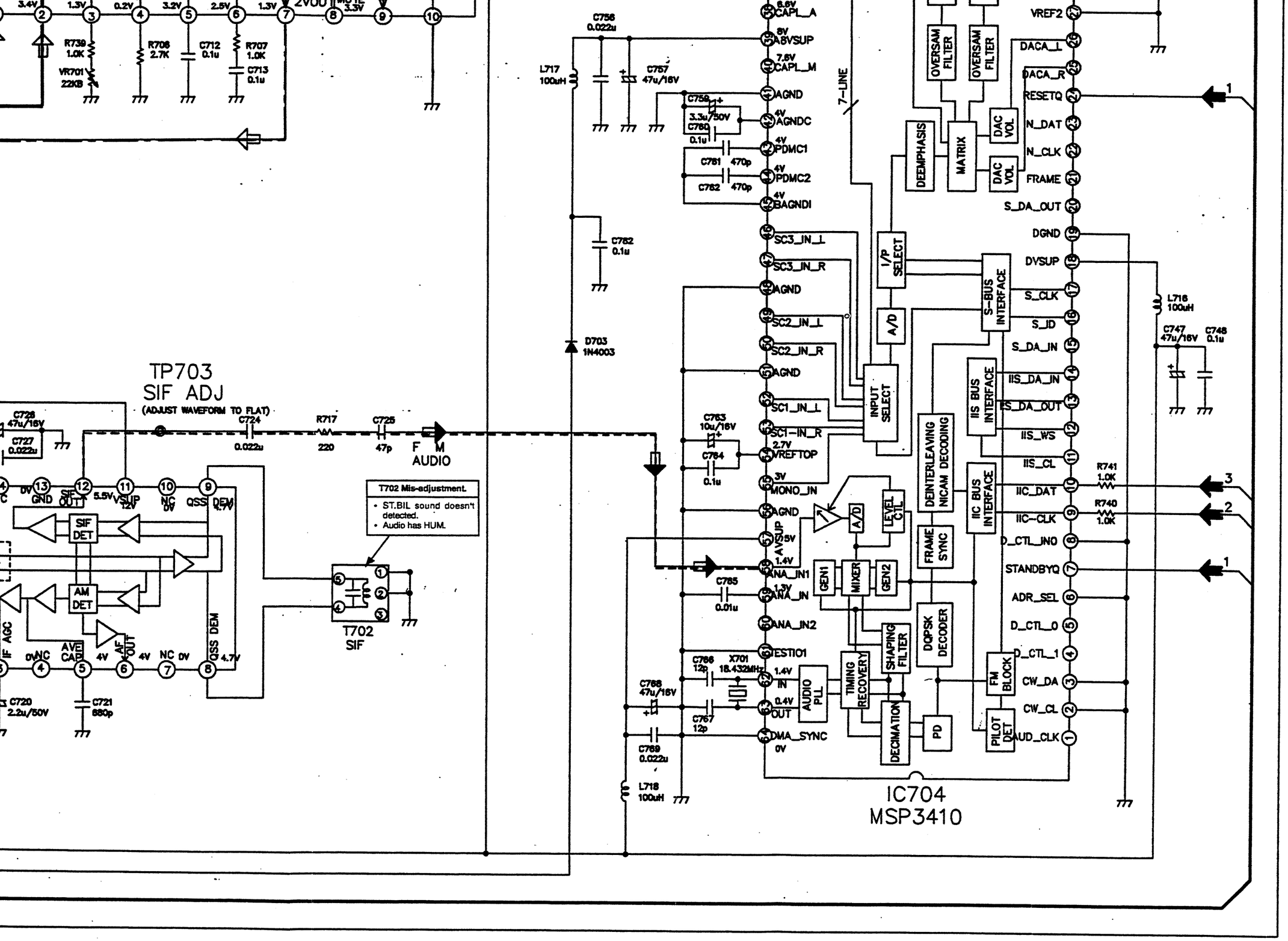

C750	O9
C751	O9
C752	O10
C753	O10
C754	O11
C756	L8
C757	L7
C759	L7
C760	L7
C761	L7
C762	L6
C763	L5
C764	L4
C765	L4
C766	L3
C767	L3
C768	L3
C769	L2
C770	D2
C772	J10
C773	K10
C774	D9
C775	C8
C776	B9
C779	C9
C780	B9
C781	B8
C782	L6
C784	J7
C785	E5
D703	L5
FL701	N10
FL702	N10
IC701	G8
IC702	F3
IC704	N2
L704	F9
L705	I10
L706	F10
L707	D7
L708	C7
L709	G5
L714	D5
L715	D4
L716	P6
L717	K7
L718	L2
L719	C9
L720	C8
L721	B9
MD701	D6
Q701	E9
Q703	C7
Q709	B4
Q710	C4
Q712	C3
R701	D8
R702	E9
R703	E8
R704	E9
R705	E8
R706	H7
R707	I7
R708	J10
R710	H11
R711	G11
R712	G11

< THE CONDITION OF IC PIN VOLTAGE : EE MODE >

THE VOLTAGE IS SUBJECT TO CHANGE A LITTLE ACCO. TO INPUT CONDITION.

95. 08. 17 7-867B

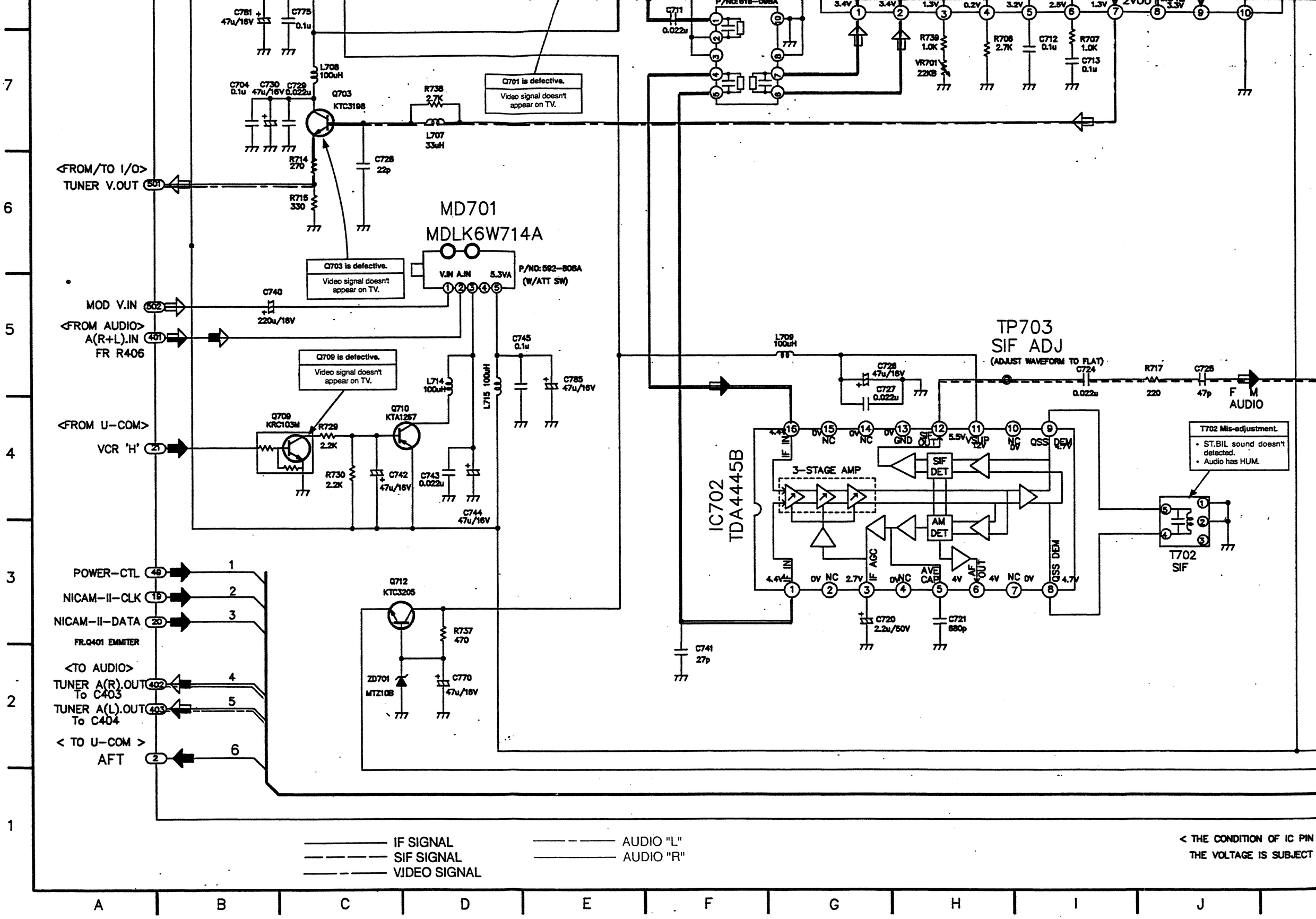
Q701 is defective.
Video signal doesn't appear on TV.
Q703 is defective.
Video signal doesn't appear on TV.
Q709 is defective.
Video signal doesn't appear on TV.
MD701
MDLK6W714A
V.IN A.IN 5.3VA
P/NO:592-808A
(W/ATT SW)
TP703
SIF ADJ
(ADJUST WAVEFORM TO FLAT)
IC702
TDA4445B
3-STAGE AMP
SIF DET
AM DET
T702 Mis-adjustment.
• ST.BIL sound doesn't detected.
• Audio has HUM.
T702
SIF
<FROM/TO I/O>
TUNER V.OUT
MOD V.IN
<FROM AUDIO>
A(R+L).IN
FR R406
<FROM U-COM>
VCR 'H'
POWER-CTL
NICAM-II-CLK
NICAM-II-DATA
FR.Q401 EMMITER
<TO AUDIO>
TUNER A(R).OUT
To C403
TUNER A(L).OUT
To C404
< TO U-COM >
AFT
F M
AUDIO
IF SIGNAL
SIF SIGNAL
VIDEO SIGNAL
AUDIO "L"
AUDIO "R"
< THE CONDITION OF IC PIN
THE VOLTAGE IS SUBJECT

1-7. Scart In/Out & Function OSD Circuit Diagram

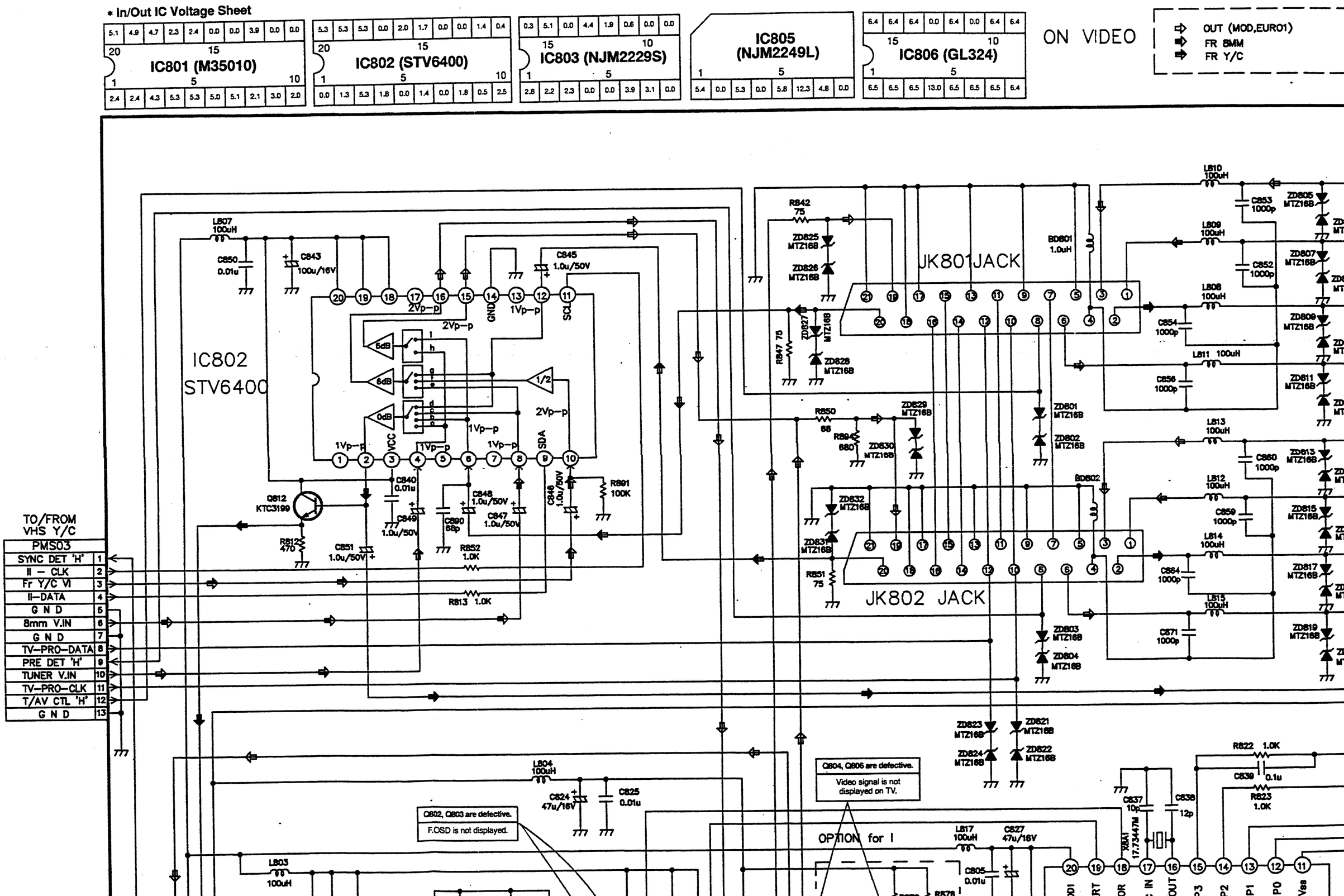

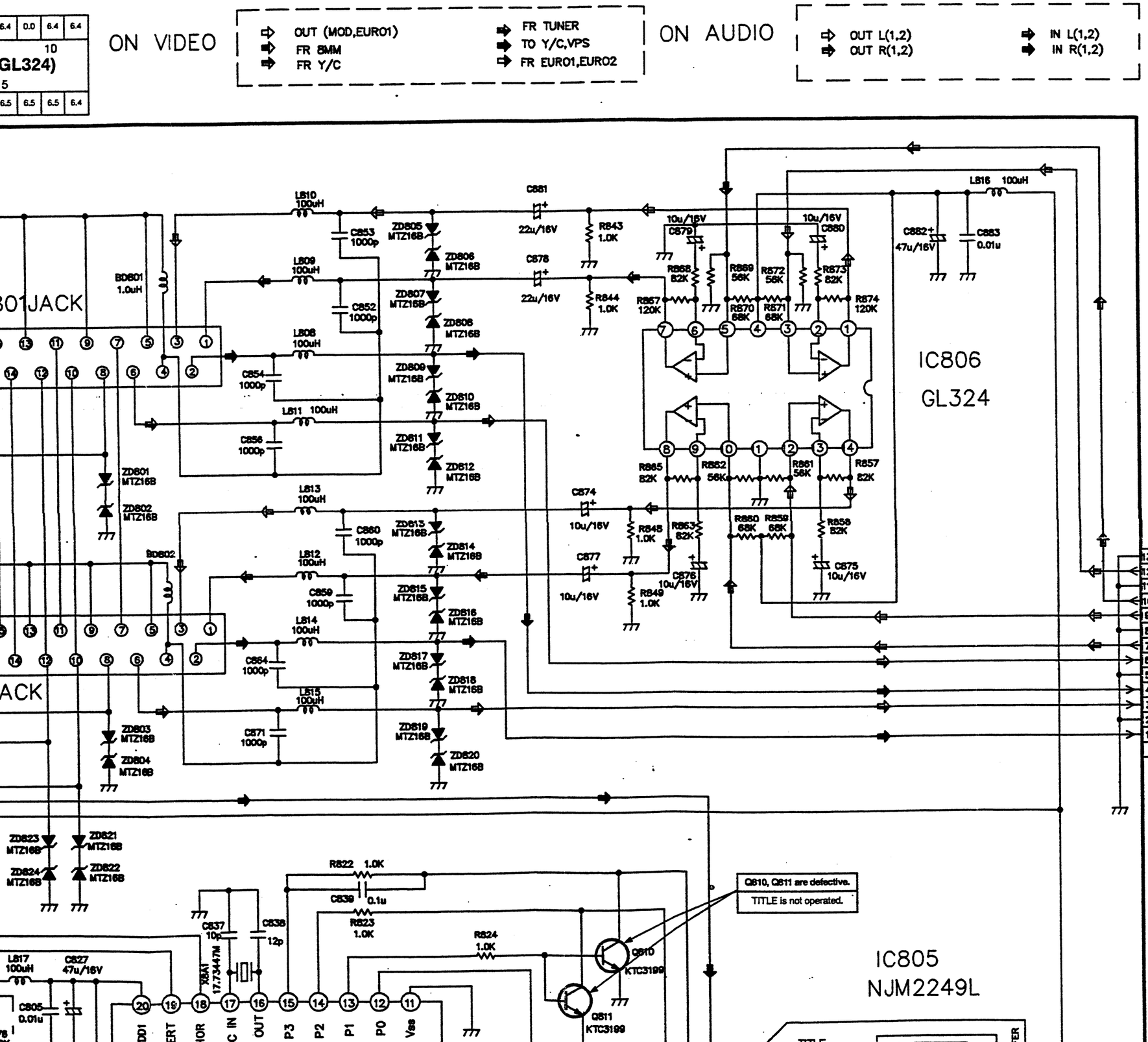

LOCATION GUIDE

BD801	I10	Q813	G4
BD802	I8	Q814	H4
C801	O2	R801	M3
C802	N2	R802	N3
C803	N3	R803	M3
C804	M3	R804	N3
C805	H5	R805	N3
C808	E2	R806	N3
C813	C4	R807	M3
C814	C4	R808	D2
C815	D4	R809	I2
C816	D4	R810	F2
C817	E4	R811	F2
C818	C2	R812	C7
C819	D2	R813	D7
C820	D2	R814	D4
C821	D2	R815	D4
C822	E2	R816	E4
C823	E2	R817	F4
C824	E5	R818	E2
C825	F5	R819	D2
C826	F2	R820	D2
C827	I5	R821	C2
C828	I3	R822	J6
C829	I3	R823	J5
C830	H2	R824	K5
C831	J2	R825	K3
C832	K2	R826	J3
C833	H3	R831	G2
C835	G3	R832	G2
C836	J3	R833	G2
C837	I5	R834	I2
C838	J5	R835	I2
C839	J5	R836	J2
C840	D8	R837	K2
C843	C10	R838	H3
C844	G4	R839	H3
C845	E10	R840	G3
C846	E8	R841	G4
C847	E7	R842	G10
C848	D8	R843	L10
C849	D7	R844	L9
C850	B10	R847	G9
C851	C7	R848	L8
C852	J9	R849	L7
C853	J10	R850	G8
C854	J9	R851	G7
C856	J9	R852	D7
C859	J7	R857	N8
C860	J8	R858	N8
C864	J7	R859	M8
C871	J7	R860	M8
C874	L8	R861	M8
C875	N8	R862	M8
C876	M8	R863	M8
C877	L8	R865	L8
C878	L10	R867	L9
C879	M10	R868	M10
C880	N10	R869	M10
C881	L10	R870	M9
C882	N10	R871	M9
C883	O10	R872	M10
C884	I3	R873	N10
C885	J3	R874	N9
C886	J3	R876	H5
C890	D7	R877	H4
C891	H4	R878	H4
C892	H2	R879	O3
D801	H2	R891	F8
IC801	K4	R892	H4
IC803	C3	R893	H3

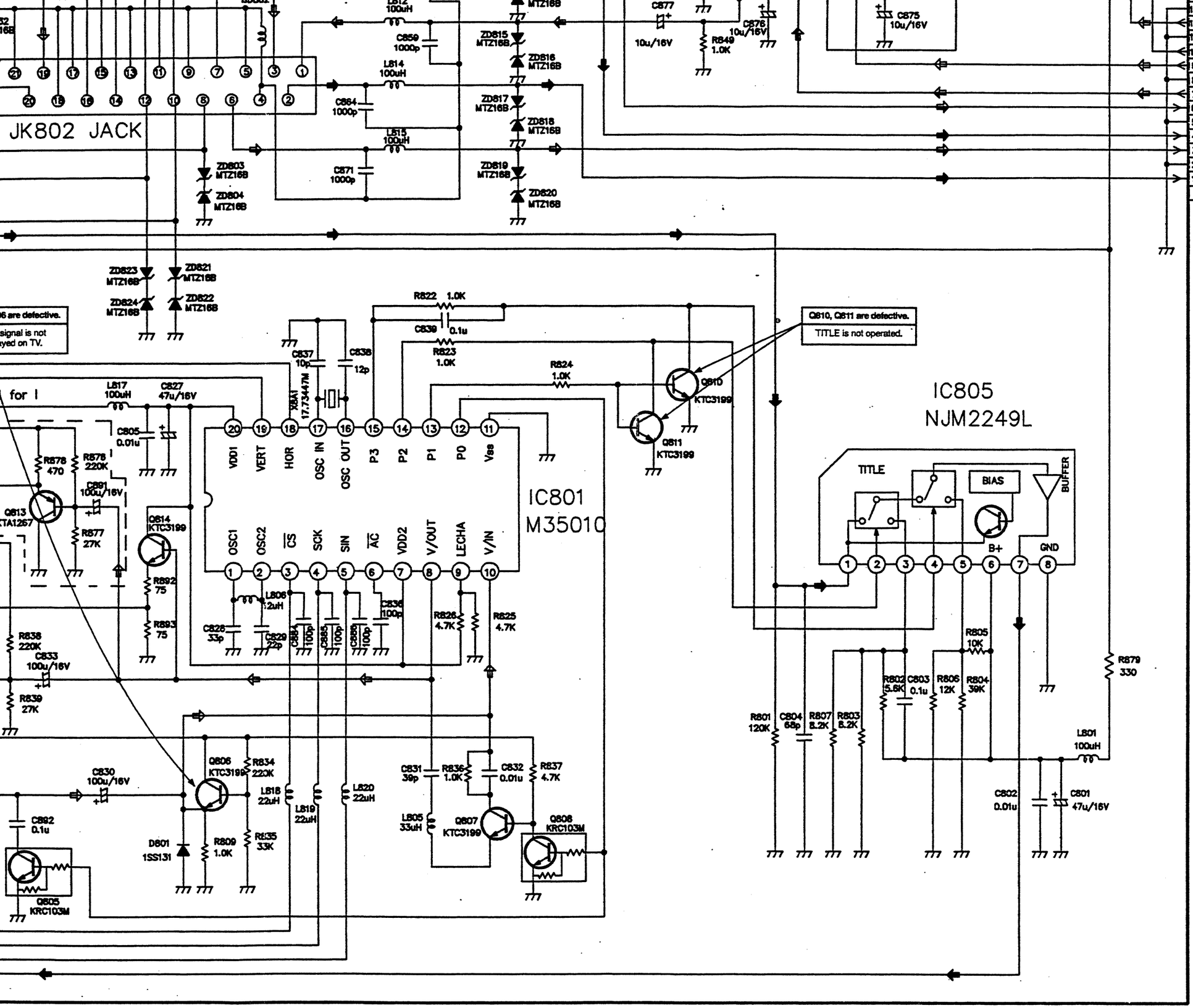

C846	E8	R841	G4
C847	E7	R842	G10
C848	D8	R843	L10
C849	D7	R844	L9
C850	B10	R847	G9
C851	C7	R848	L8
C852	J9	R849	L7
C853	J10	R850	G8
C854	J9	R851	G7
C856	J9	R852	D7
C859	J7	R857	N8
C860	J8	R858	N8
C864	J7	R859	M8
C871	J7	R860	M8
C874	L8	R861	M8
C875	N8	R862	M8
C876	M8	R863	M8
C877	L8	R865	L8
C878	L10	R867	L9
C879	M10	R868	M10
C880	N10	R869	M10
C881	L10	R870	M9
C882	N10	R871	M9
C883	O10	R872	M10
C884	I3	R873	N10
C885	J3	R874	N9
C886	J3	R876	H5
C890	D7	R877	H4
C891	H4	R878	H4
C892	H2	R879	O3
D801	H2	R891	F8
IC801	K4	R892	H4
IC803	C3	R893	H3
IC805	N5	R894	G8
IC806	N9	X801	C2
JK801	H9	X8A1	I5
JK802	G7	ZD801	I8
L801	O3	ZD802	I8
L803	C5	ZD803	I7
L804	E6	ZD804	I6
L805	J2	ZD805	K10
L806	I4	ZD806	K10
L807	B10	ZD807	K9
L808	J9	ZD808	K9
L809	J10	ZD809	K9
L810	J10	ZD810	K9
L811	J9	ZD811	K9
L812	J8	ZD812	K8
L813	J8	ZD813	K8
L814	J7	ZD814	K8
L815	J7	ZD815	K7
L816	O10	ZD816	K7
L817	H5	ZD817	K7
L818	I2	ZD818	K7
L819	I2	ZD819	K7
L820	J2	ZD820	K6
PMS01	P6	ZD821	I6
PMS02	A3	ZD822	I6
PMS03	A7	ZD823	H6
Q801	F2	ZD824	H6
Q802	E4	ZD825	G10
Q803	E3	ZD826	G9
Q804	G2	ZD827	G9
Q805	H1	ZD828	G9
Q806	I2	ZD829	H8
Q807	K2	ZD830	G8
Q808	K2	ZD831	G7
Q809	G3	ZD832	G8
Q810	L5	ZD833	E3
Q811	L5	ZD834	E3
Q812	C8		

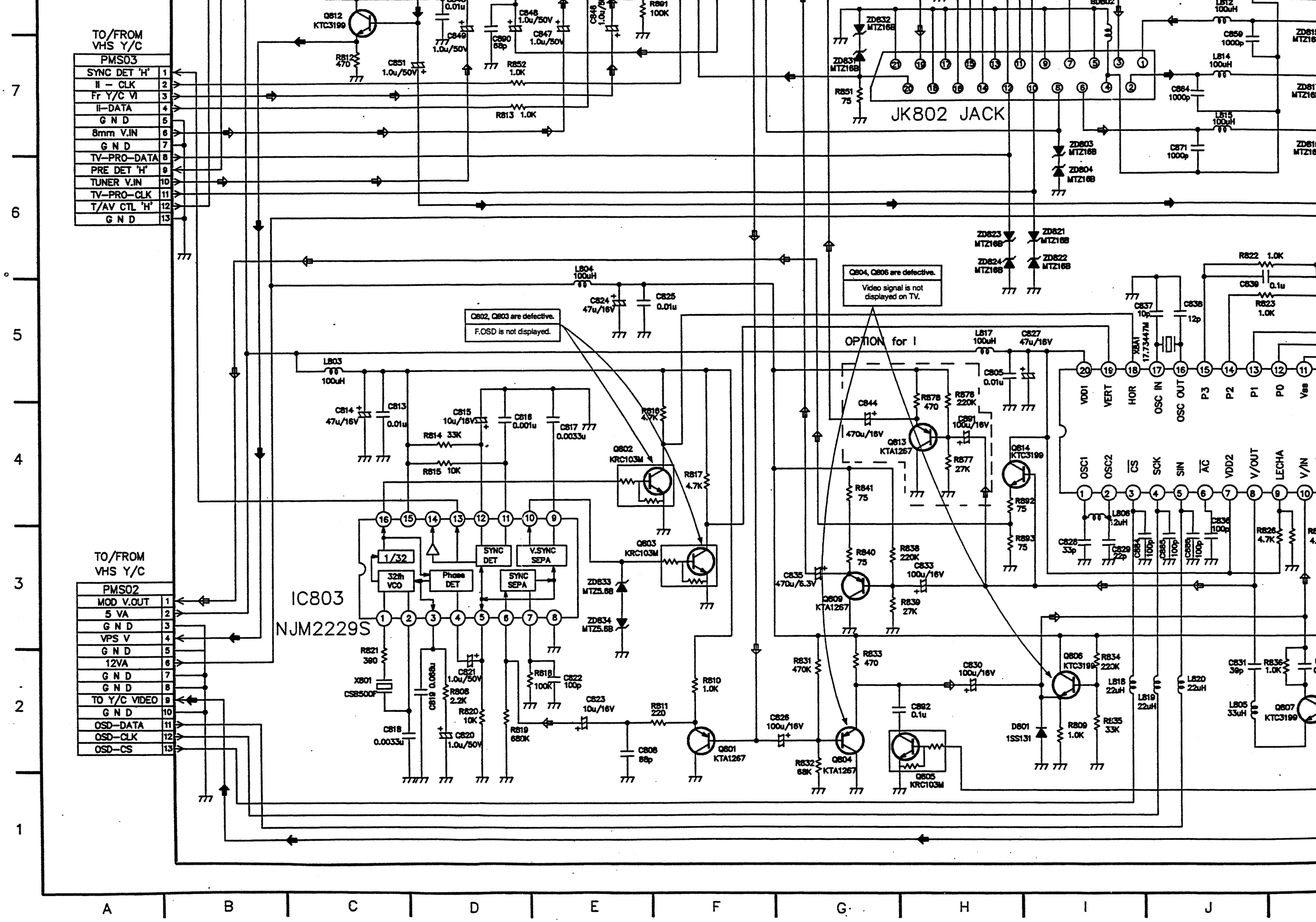
TO/FROM VHS Y/C
PMS03
SYNC DET 'H' 1
II – CLK 2
Fr Y/C VI 3
II–DATA 4
G N D 5
8mm V.IN 6
G N D 7
TV–PRO–DATA 8
PRE DET 'H' 9
TUNER V.IN 10
TV–PRO–CLK 11
T/AV CTL 'H' 12
G N D 13
TO/FROM VHS Y/C
PMS02
MOD V.OUT 1
5 VA 2
G N D 3
VPS V 4
G N D 5
12VA 6
G N D 7
G N D 8
TO Y/C VIDEO 9
G N D 10
OSD–DATA 11
OSD–CLK 12
OSD–CS 13
IC803
NJM2229S
JK802 JACK
Q802, Q803 are defective.
F.OSD is not displayed.
Q804, Q806 are defective.
Video signal is not displayed on TV.
OPTION for I
1/32
32fh VCO
Phase DET
SYNC DET
SYNC SEPA
V.SYNC SEPA
VDD1
VERT
HOR
OSC IN
OSC OUT
P3
P2
P1
P0
Vss
OSC1
OSC2
CS
SCK
SIN
AC
VDD2
V/OUT
LECHA
V/IN
A
B
C
D
E
F
G
H
I
J

1-8. Pre-Amp Circuit Diagram

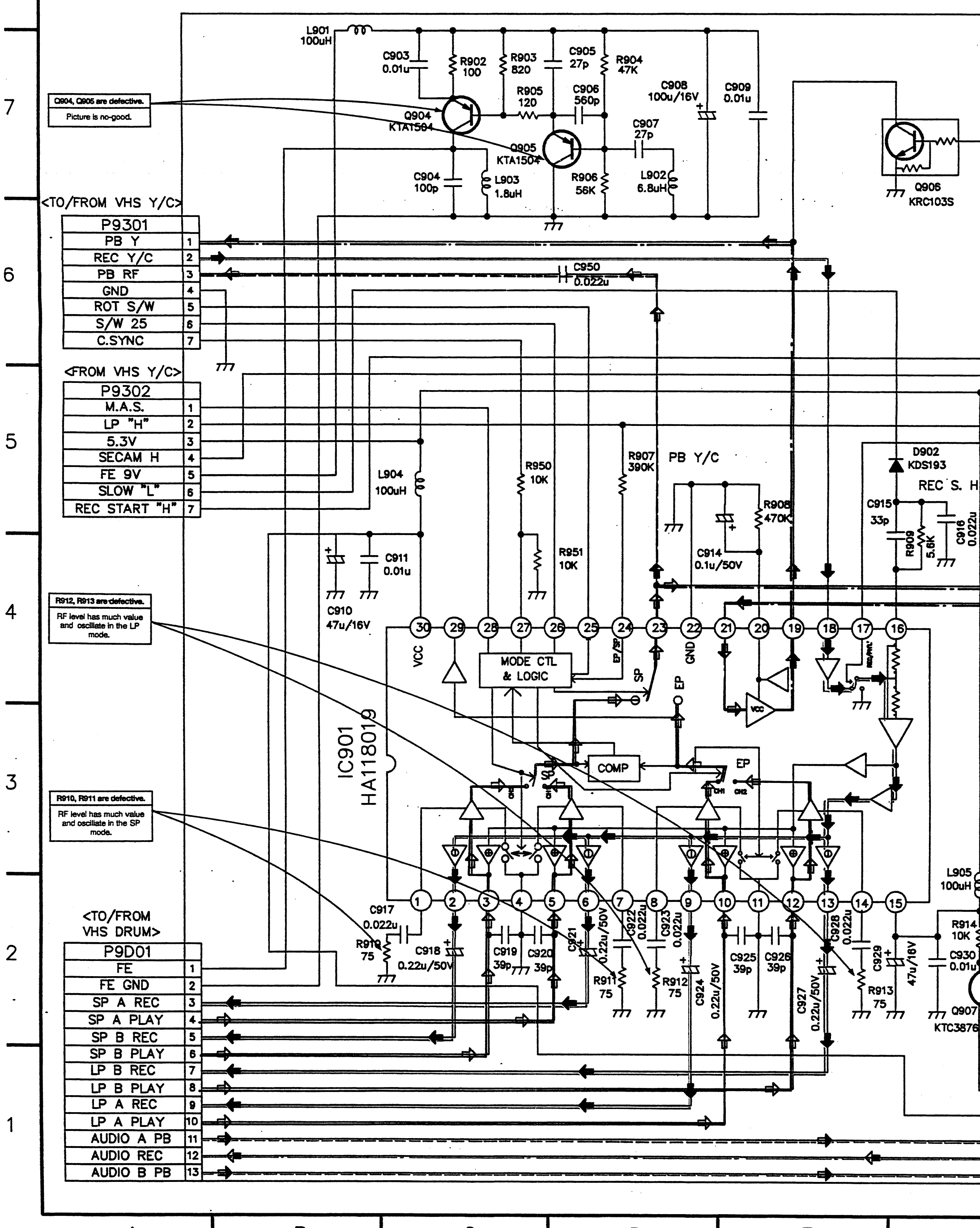

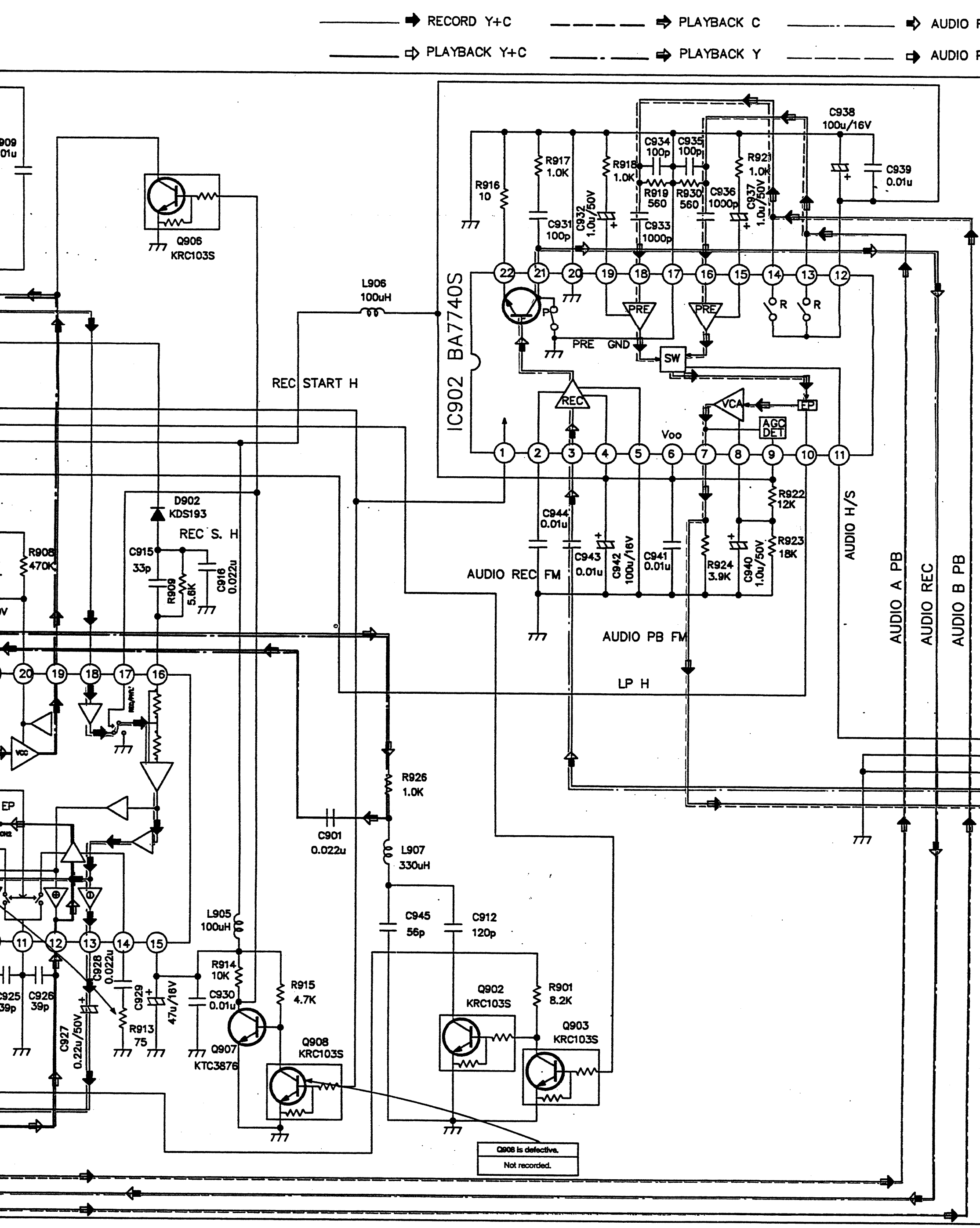
RECORD Y+C
PLAYBACK C
AUDIO
PLAYBACK Y+C
PLAYBACK Y
AUDIO
IC902 BA7740S
Q906
KRC103S
L906
100uH
REC START H
D902
KDS193
REC S. H
R908
470K
C915
33p
R909
5.6K
C916
0.022u
C938
100u/16V
C939
0.01u
C934
100p
C935
100p
R917
1.0K
R918
1.0K
R921
1.0K
R916
10
R919
560
R930
560
C936
1000p
C937
1.0u/50V
C931
100p
C932
1.0u/50V
C933
1000p
PRE
GND
SW
REC
VCA
AGC DET
EP
Voo
R922
12K
R923
18K
C944
0.01u
C943
0.01u
C942
100u/16V
C941
0.01u
R924
3.9K
C940
1.0u/50V
AUDIO REC FM
AUDIO PB FM
LP H
AUDIO H/S
AUDIO A PB
AUDIO REC
AUDIO B PB
R926
1.0K
C901
0.022u
L907
330uH
L905
100uH
C945
56p
C912
120p
R914
10K
C930
0.01u
R915
4.7K
Q907
KTC3876
Q908
KRC103S
Q902
KRC103S
R901
8.2K
Q903
KRC103S
C925
39p
C926
39p
C927
0.22u/50V
R913
75
C928
0.022u
C929
47u/16V
Q908 is defective.
Not recorded.

95.08.10 7–

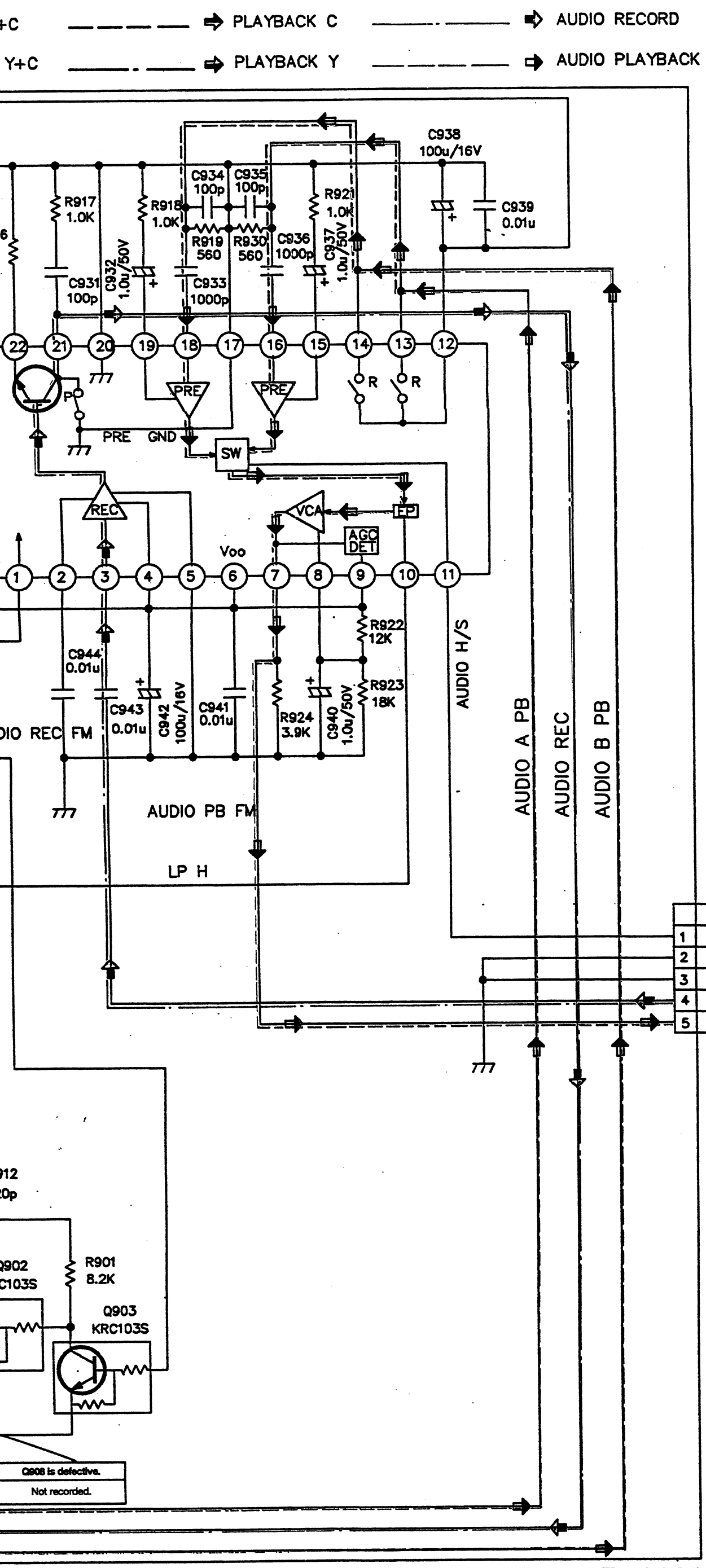

95.08.10 7-869A

LOCATION GUIDE

C901	G3
C903	C7
C904	C7
C905	D7
C906	D7
C907	D7
C908	D7
C909	E7
C910	B4
C911	C4
C912	G2
C914	D4
C915	E5
C916	F4
C917	B2
C918	C2
C919	C2
C920	C2
C921	D2
C922	D2
C923	D2
C924	D2
C925	E2
C926	E2
C927	E2
C928	E2
C929	F2
C930	F2
C931	H7
C932	H7
C933	H7
C934	H7
C935	I7
C936	I7
C937	I7
C938	J7
C939	J7
C940	I5
C941	H5
C942	H5
C943	H5
C944	H5
C945	G3
C950	D6
D902	F5
IC901	B3
IC902	G5
L901	B7
L902	D7
L903	C7
L904	B5
L905	F3
L906	G6
L907	G3
P9D01	A2
P9301	A6
P9302	A5
P9404	K4
Q902	G2
Q903	H2
Q904	C7
Q905	C7
Q906	F7
Q907	F2
Q908	F2
R901	H2
R902	C7
R903	C7
R904	D7
R905	C7
R906	D7
R907	D5
R908	E5

R909	F4
R910	B2
R911	D2
R912	D2
R913	E2
R914	F2
R915	F2
R916	G7
R917	H7
R918	H7
R919	H7
R921	I7
R922	I5
R923	I5
R924	I5
R926	G3
R930	I7
R950	C5
R951	C4

H I J K L M

* VHS Pre-Amp IC Voltage Sheet

SP mode — PB (REC)

5.0 (5.0)	2.0 (3.8)	4.7 (4.8)	0.3 (0.3)	1.3 (1.3)	2.2 (2.2)	0.1 (0.1)	0 (4.4)	0 (0)	2.8 (3.1)	2.3 (0.1)	2.5 (0)	4.1 (4.1)	0 (2.2)	2.7 (2.7)

30 25 20

IC901 (HA118019)

1 5 10 15

2.3 (4.3)	0 (2.2)	0.7 (2.2)	0 (0)	0.7 (2.2)	0 (2.2)	2.3 (4.3)	4.2 (4.3)	0 (0)	0 (0)	0 (0)	0 (0)	0 (0)	4.2 (4.2)	5.0 (4.8)

LP mode — PB (REC)

5.0 (5.0)	2.0 (3.8)	4.7 (4.8)	0.3 (0.3)	1.3 (1.3)	2.2 (2.2)	4.9 (4.9)	3.1 (4.4)	0 (0)	2.8 (3.1)	2.2 (0.1)	2.5 (0)	4.1 (4.0)	0 (2.2)	2.7 (2.7)

30 25 20

IC901 (HA118019)

1 5 10 15

4.2 (4.2)	0 (0)	0 (0)	0 (0)	0 (0)	0 (0)	4.2 (4.2)	2.3 (4.2)	0 (2.1)	0.7 (2.1)	0 (2.1)	0.7 (2.1)	0 (2.1)	2.3 (4.2)	5 (4.8)

SP mode — PB (REC)

0 (0)	0 (0)	0 (0)	0.74 (0)	0.65 (0)	0 (0)	0.65 (0)	0.74 (0)	0 (4.27)	0 (4.27)	5.05 (4.98)

20 15

IC902 (BA7790S)

1 5 10

0.33 (6.0)	0.49 (1.37)	5.05 (2.77)	5.05 (4.98)	0.02 (0)	5.06 (4.98)	2.39 (3.60)	3.02 (2.97)	5.06 (4.98)	0 (0.02)	2.53 (0.01)

LP mode — REC (PB)

0 (0)	0 (0)	0 (0)	0.74 (0)	0.65 (0)	0 (0)	0.65 (0)	0.74 (0)	0 (4.27)	4.67 (4.27)	5.05 (4.98)

20 15

IC902 (BA7790S)

1 5 10

0.33 (6.0)	0.50 (1.37)	2.82 (2.77)	5.05 (4.98)	0 (0)	5.05 (4.98)	2.70 (3.6)	5.05 (2.97)	5.05 (4.98)	5.11 (0.02)	2.53 (0.01)

* 8mm System IC Voltage Sheet

IC501 (CXP80724'S)

PB mode

Pin No.	1	2	3	4	5	6	7	8	9	10	11	12	13	14	15	16	17	18	19	20	21	22	23	24	25
Voltage	2.5	0.0	0.0	0.0	0.0	0.0	1.8	5.3	0.0	0.0	0.0	0.0	0.0	0.0	0.0	4.6	0.0	0.0	0.0	5.3	5.3	5.2	0.0	5.2	0.0
Pin No.	26	27	28	29	30	31	32	33	34	35	36	37	38	39	40	41	42	43	44	45	46	47	48	49	50
Voltage	0.0	4.6	5.2	0.0	5.2	0.0	0.0	0.0	0.0	1.2	0.0	5.0	0.0	0.0	5.3	0.0	2.6	2.3	0.0	5.2	0.0	5.1	0.0	5.2	5.2
Pin No.	51	52	53	54	55	56	57	58	59	60	61	62	63	64	65	66	67	68	69	70	71	72	73	74	75
Voltage	0.0	0.0	5.2	5.1	0.0	1.4	0.0	0.0	4.8	4.7	2.4	2.7	0.0	0.0	0.0	0.0	0.0	0.0	6.6	2.5	0.0	5.1	1.0	0.0	1.0
Pin No.	76	77	78	79	80	81	82	83	84	85	86	87	88	89	90	91	92	93	94	95	96	97	98	99	100
Voltage	1.0	2.6	5.2	5.2	4.9	5.2	5.3	0.0	0.0	5.7	0.0	5.2	0.0	5.3	5.3	5.3	0.0	5.3	0.0	0.0	5.2	0.0	5.2	2.3	2.6

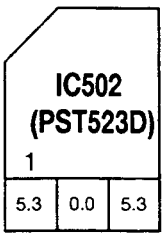

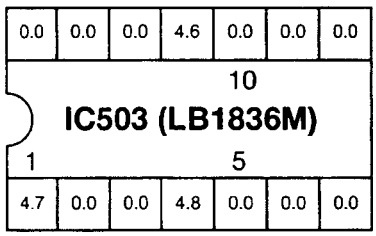

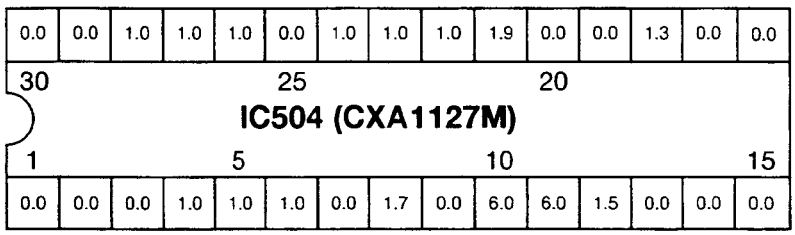

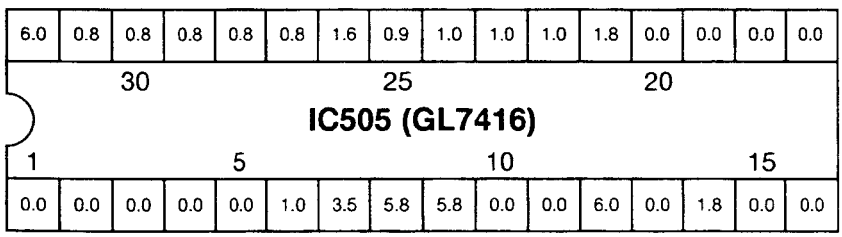

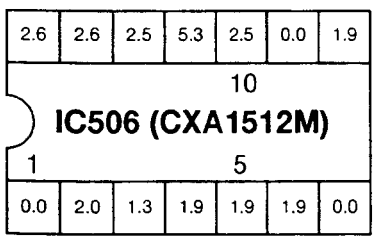

IC508 (XR10823)

Pin No.	1	2	3	4	5	6	7	8	9	10	11	12	13	14	15	16
Voltage	0.0	2.5	5.2	0.0	2.6	0.0	1.5	2.2	2.5	0.0	0.0	0.0	0.0	0.0	2.6	2.6
Pin No.	32	31	30	29	28	27	26	25	24	23	22	21	20	19	18	17
Voltage	3.4	0.8	2.0	0.0	0.0	0.6	0.9	2.6	0.0	2.6	2.6	2.6	2.6	0.0	2.5	2.5

2. 8mm Circuit Diagrams

2-1. Main System (Servo, Syscon) Circuit Diagram

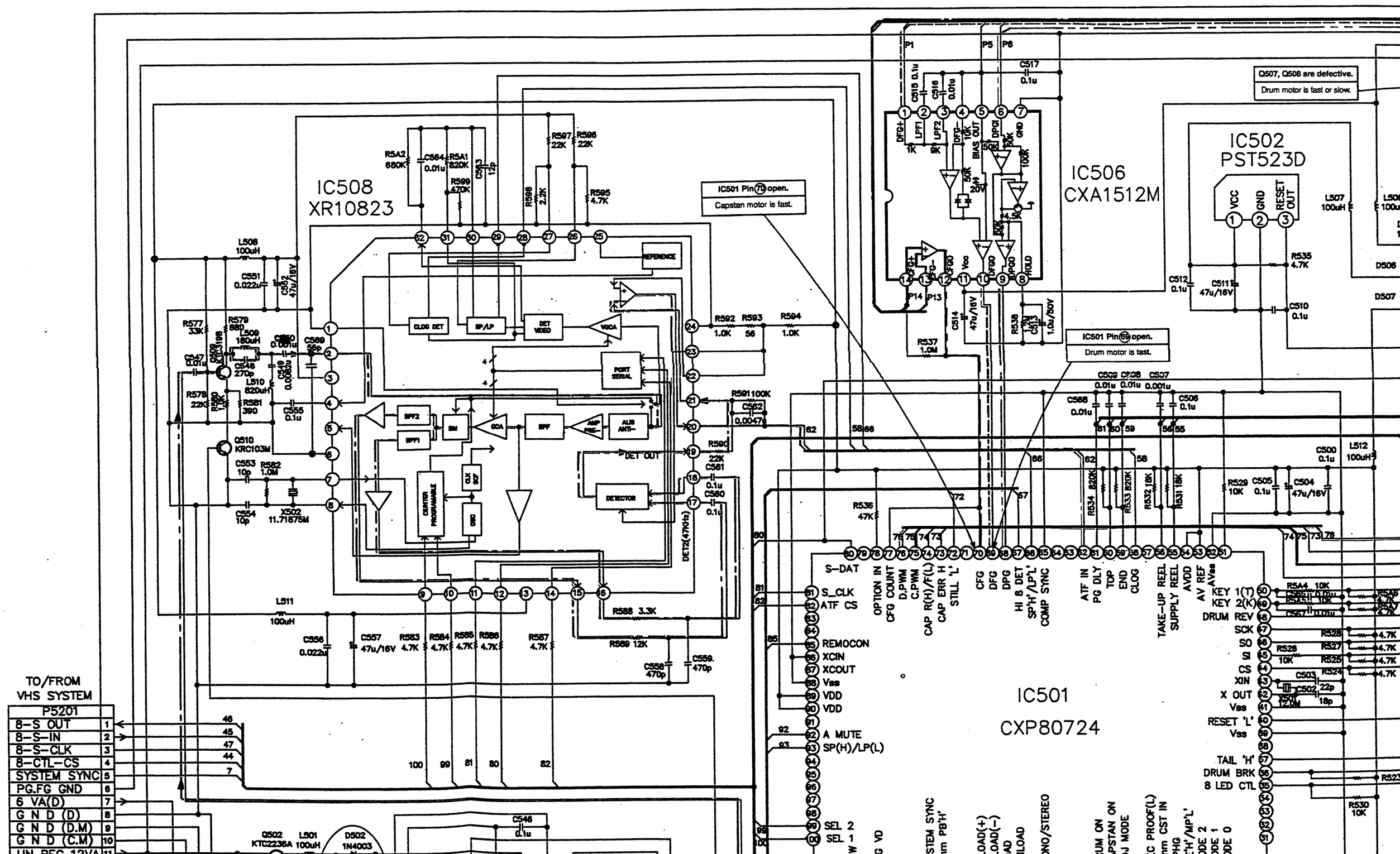

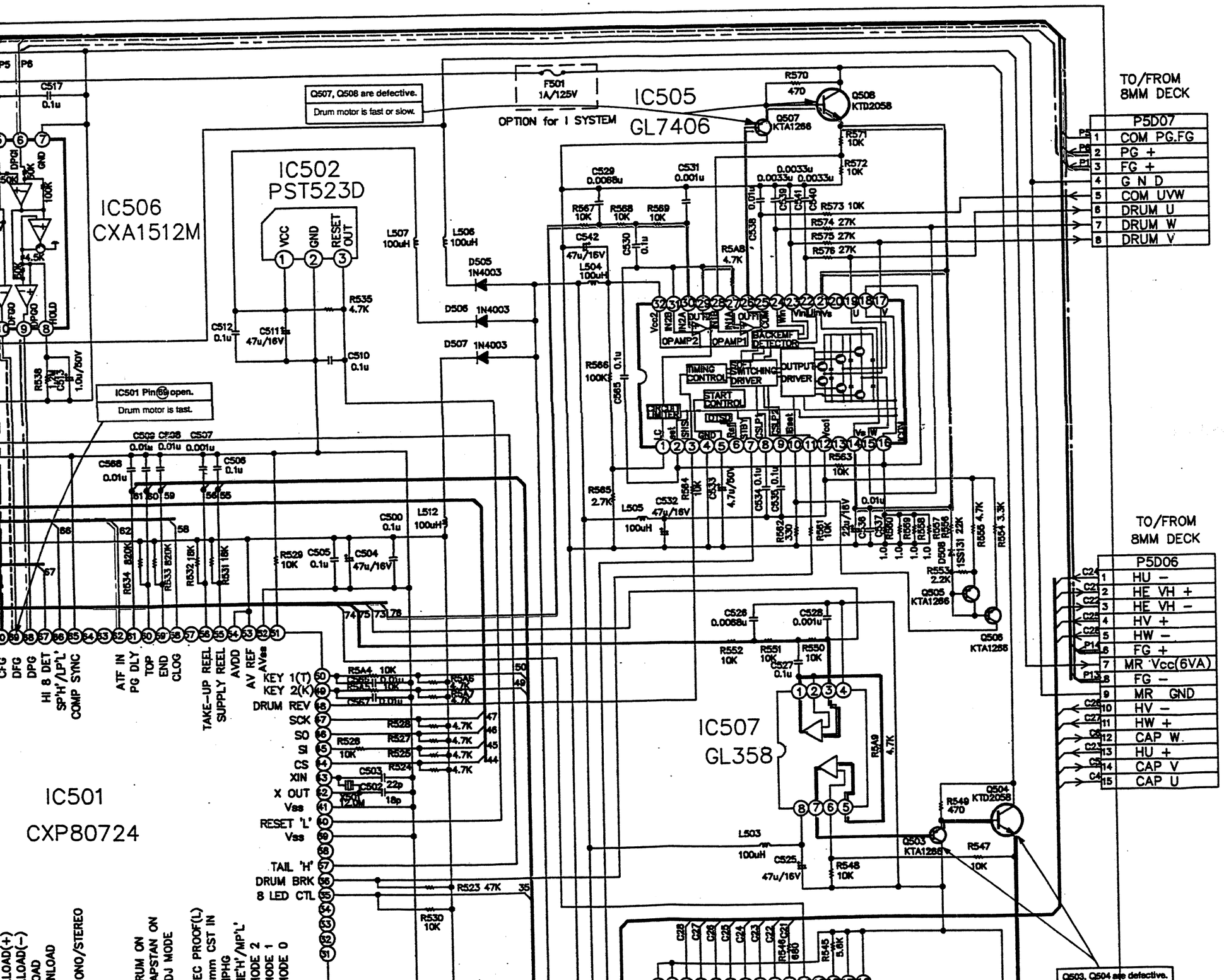

LOCATION GUIDE

C500	K7	Q502	C4
C501	J2	Q503	N5
C502	K5	Q504	O5
C503	K5	Q505	N7
C504	K7	Q506	O6
C505	J7	Q507	M10
C506	J8	Q508	N10
C507	I8	Q509	B8
C508	I8	Q510	B7
C509	I8	R501	G4
C510	K8	R502	I3
C511	J9	R503	I3
C512	J9	R504	I3
C513	I8	R505	I3
C514	H8	R506	I3
C515	H10	R507	J4
C516	H10	R508	J4
C517	H10	R509	J4
C518	M2	R510	J4
C519	M2	R511	J4
C520	M2	R512	J3
C521	M2	R513	J3
C522	M2	R514	J3
C523	M2	R515	J3
C524	N2	R516	J3
C525	M5	R517	J3
C526	M7	R518	J3
C527	M6	R519	J3
C528	N7	R520	J3
C529	L10	R521	K2
C530	L9	R522	K2
C531	M10	R523	K5
C532	M7	R524	K6
C533	M7	R525	K6
C534	M7	R526	J6
C535	M7	R527	K6
C536	N7	R528	K6
C537	N7	R529	J7
C538	M9	R530	K4
C539	N9	R531	J7
C540	N9	R532	I7
C541	N9	R533	I7
C542	L9	R534	I7
C544	B4	R535	K9
C545	E3	R536	G7
C546	D4	R537	H8
C547	B8	R538	H8
C548	B8	R539	B4
C549	C8	R541	M2
C550	C8	R542	M2
C551	B9	R543	M2
C552	C9	R544	N2
C553	B7	R545	N4
C554	B7	R546	M4
C555	C8	R547	O5
C556	C6	R548	N5
C557	C6	R549	O5
C558	F6	R550	N6
C559	F6	R551	M6
C560	F7	R552	M6
C561	F7	R553	N7
C562	F8	R554	O7
C563	D9	R555	O7
C564	D10	R556	O7
C565	L8	R557	O7
C566	J6	R558	N7
C567	J6	R559	N7
C568	I8	R560	N7
C569	C8	R561	N7
D501	F2	R562	M7
D502	C4	R563	N8
D503	C4	R564	M7

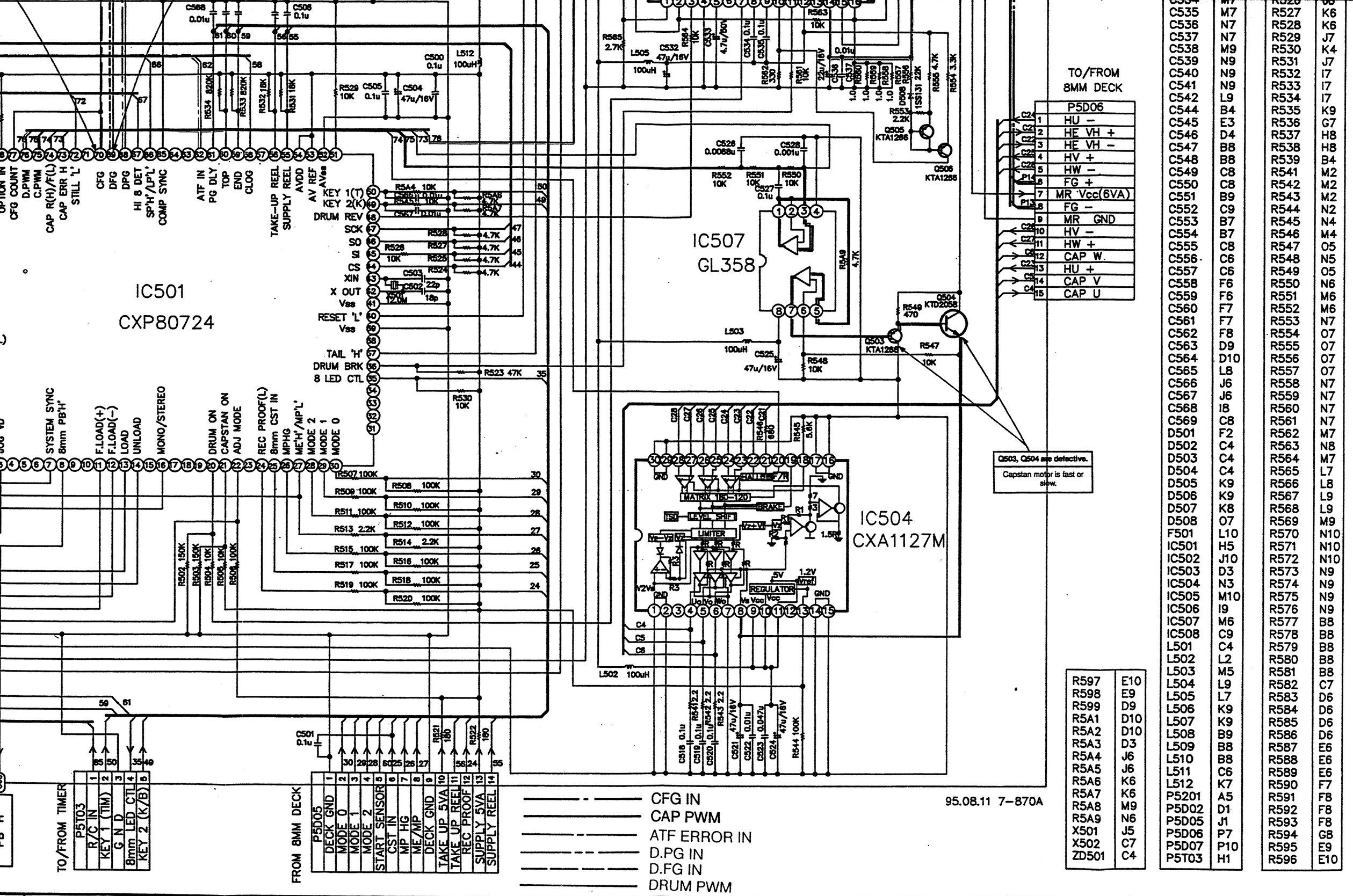

R597	E10
R598	E9
R599	D9
R5A1	D10
R5A2	D10
R5A3	D3
R5A4	J6
R5A5	J6
R5A6	K6
R5A7	K6
R5A8	M9
R5A9	N6
X501	J5
X502	C7
ZD501	C4

C535	M7
C536	N7
C537	N7
C538	M9
C539	N9
C540	N9
C541	N9
C542	L9
C544	B4
C545	E3
C546	D4
C547	B8
C548	B8
C549	C8
C550	C8
C551	B9
C552	C9
C553	B7
C554	B7
C555	C8
C556	C6
C557	C6
C558	F6
C559	F6
C560	F7
C561	F7
C562	F8
C563	D9
C564	D10
C565	L8
C566	J6
C567	J6
C568	I8
C569	C8
D501	F2
D502	C4
D503	C4
D504	C4
D505	K9
D506	K9
D507	K8
D508	O7
F501	L10
IC501	H5
IC502	J10
IC503	D3
IC504	N3
IC505	M10
IC506	I9
IC507	M6
IC508	C9
L501	C4
L502	L2
L503	M5
L504	L9
L505	L7
L506	K9
L507	K9
L508	B9
L509	B8
L510	B8
L511	C6
L512	K7
P5201	A5
P5D02	D1
P5D05	J1
P5D06	P7
P5D07	P10
P5T03	H1

R527	K6
R528	K6
R529	J7
R530	K4
R531	J7
R532	I7
R533	I7
R534	I7
R535	K9
R536	G7
R537	H8
R538	H8
R539	B4
R541	M2
R542	M2
R543	M2
R544	N2
R545	N4
R546	M4
R547	O5
R548	N5
R549	O5
R550	N6
R551	M6
R552	M6
R553	N7
R554	O7
R555	O7
R556	O7
R557	O7
R558	N7
R559	N7
R560	N7
R561	N7
R562	M7
R563	N8
R564	M7
R565	L7
R566	L8
R567	L9
R568	L9
R569	M9
R570	N10
R571	N10
R572	N10
R573	N9
R574	N9
R575	N9
R576	N9
R577	B8
R578	B8
R579	B8
R580	B8
R581	B8
R582	C7
R583	D6
R584	D6
R585	D6
R586	D6
R587	E6
R588	E6
R589	E6
R590	F7
R591	F8
R592	F8
R593	F8
R594	G8
R595	E9
R596	E10

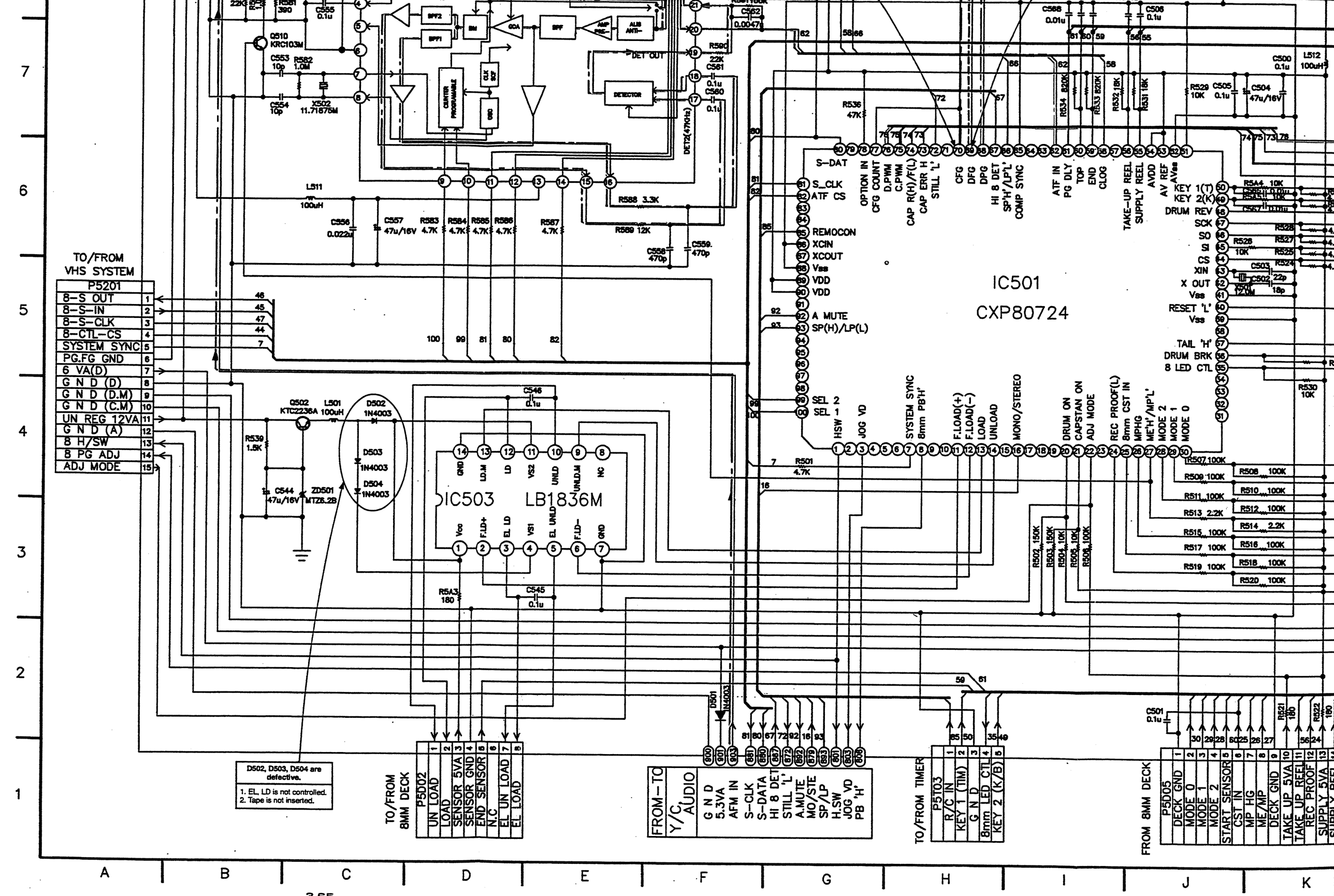
IC501
CXP80724
IC503 LB1836M
TO/FROM VHS SYSTEM
P5201
8-S OUT
8-S-IN
8-S-CLK
8-CTL-CS
SYSTEM SYNC
PG.FG GND
6 VA(D)
G N D (D)
G N D (D.M)
G N D (C.M)
UN REG 12VA
G N D (A)
8 H/SW
8 PG ADJ
ADJ MODE
D502, D503, D504 are defective.
1. EL, LD is not controlled.
2. Tape is not inserted.
TO/FROM 8MM DECK
P5D02
UN LOAD
LOAD
SENSOR 5VA
SENSOR GND
END SENSOR
N.C
EL UN LOAD
EL LOAD
FROM-TO Y/C, AUDIO
G N D
5.3VA
AFM IN
S-CLK
S-DATA
HI 8 DET
STILL 'L'
A.MUTE
MO/STE
SP/LP
H.SW
JOG VD
PB 'H'
TO/FROM TIMER
P5T03
R/C IN
KEY 1 (TIM)
G N D
8mm LED CTL
KEY 2 (K/B)
FROM 8MM DECK
P5D05
DECK GND
MODE 0
MODE 1
MODE 2
START SENSOR
CST IN
MP HG
ME/MP
DECK GND
TAKE UP 5VA
TAKE UP REEL
REC PROOF
SUPPLY 5VA
S-DAT
S_CLK
ATF CS
REMOCON
XCIN
XCOUT
Vss
VDD
VDD
A MUTE
SP(H)/LP(L)
SEL 2
SEL 1
HSW
JOG VD
SYSTEM SYNC
8mm PB'H'
F.LOAD(+)
F.LOAD(-)
LOAD
UNLOAD
MONO/STEREO
DRUM ON
CAPSTAN ON
ADJ MODE
REC PROOF(L)
8mm CST IN
MPHG
ME'H'/MP'L'
MODE 2
MODE 1
MODE 0
OPTION IN
CFG COUNT
D.PWM
C.PWM
CAP R(H)/F(L)
CAP ERR H
STILL 'L'
CFG
DFG
DPG
HI 8 DET
SP'H'/LP'L'
COMP SYNC
ATF IN
PG DLY
TOP
END
CLOG
TAKE-UP REEL
SUPPLY REEL
AVDD
AV REF
AVss
KEY 1(T)
KEY 2(K)
DRUM REV
SCK
SO
SI
CS
XIN
X OUT
Vss
RESET 'L'
Vss
TAIL 'H'
DRUM BRK
8 LED CTL
GND
LD.M
LD
VS2
UNLD
UNLD.M
NC
Vcc
F.LD+
EL LD
VS1
EL UNLD
F.LD-
GND
DET OUT
DETECTOR
DET2(47KHz)
CENTER PROGRAMMABLE
CLK SEP
BPF2
BPF1
BM
60A
BPF
AMP PRE-
ALIS ANTI-
Q510 KRC103M
Q502 KTC2236A
ZD501 MTZ6.2B
X502 11.71875M
X501 12.0M
L511 100uH
L501 100uH
L512 100uH
D501 1N4003
D502 1N4003
D503 1N4003
D504 1N4003

2-2. Y/C Circuit Diagram

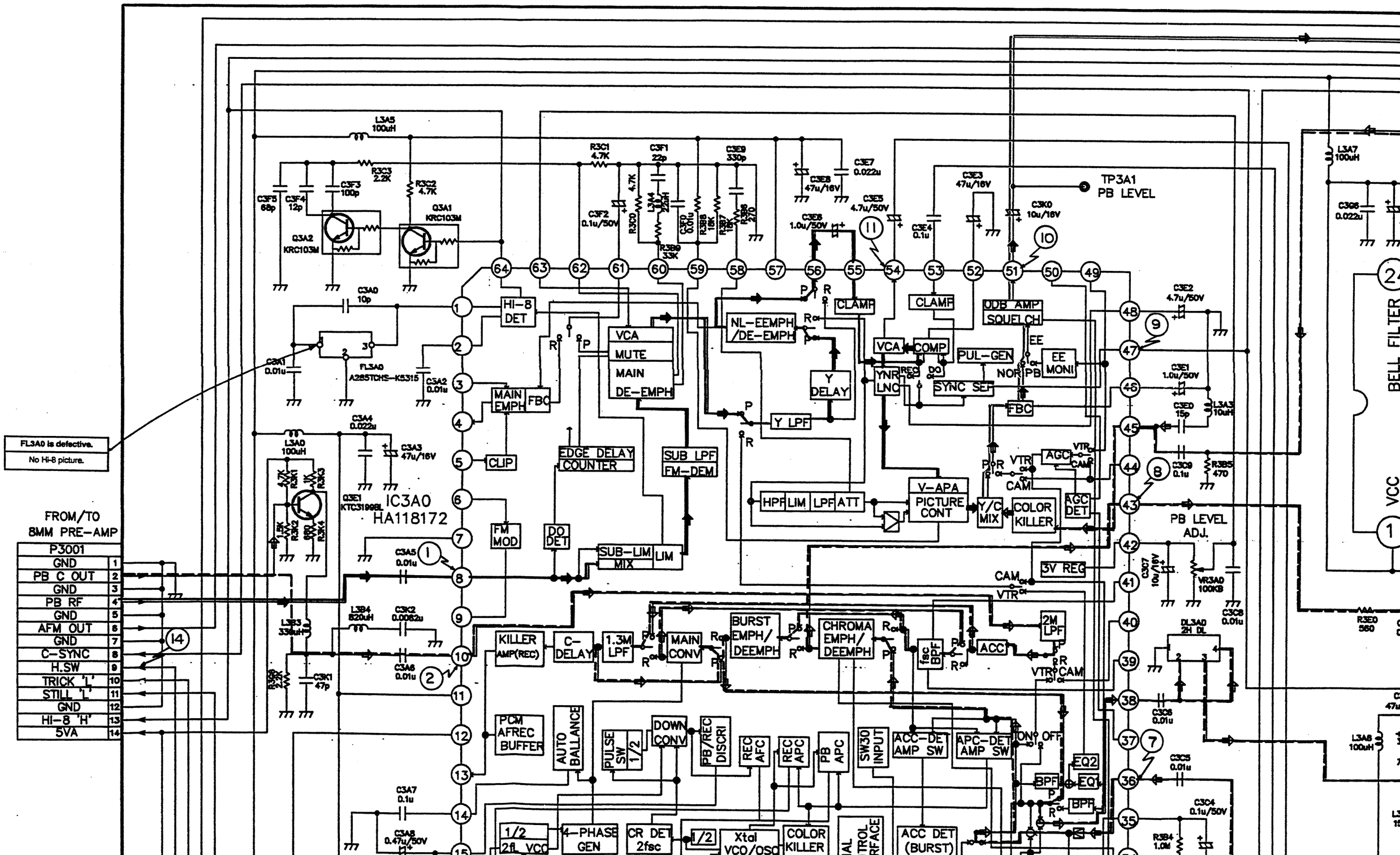

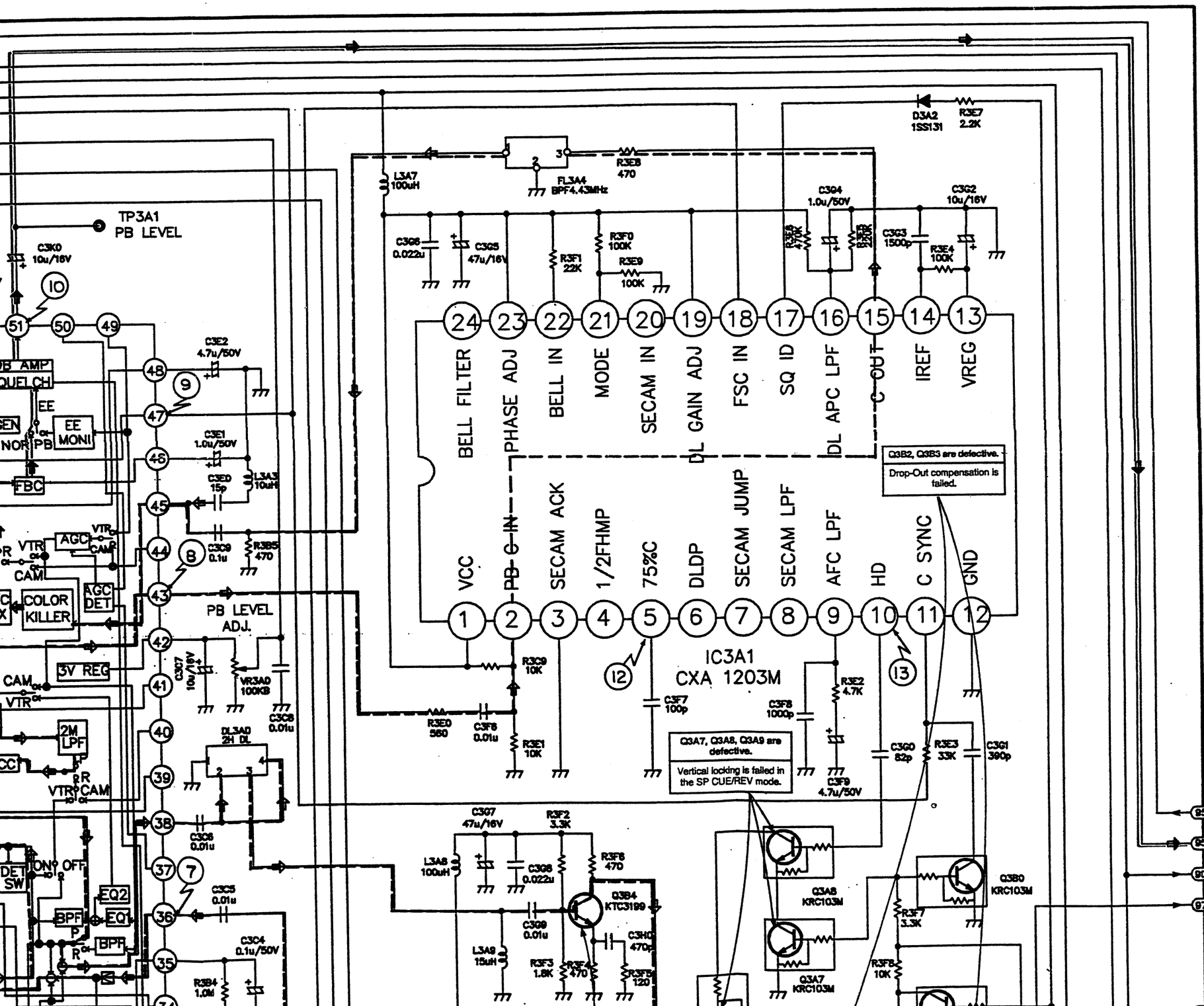

LOCATION GUIDE

C3A0	C9	Q3A5	F2
C3A1	C8	Q3A7	M4
C3A2	D8	Q3A8	M5
C3A3	D7	Q3A9	M4
C3A4	C8	Q3B0	O5
C3A5	D7	Q3B1	N4
C3A6	D6	Q3B2	M2
C3A7	D5	Q3B3	N2
C3A8	D4	Q3B4	L5
C3B0	D3	Q3E1	C7
C3B1	D3	R3A1	D4
C3B2	E3	R3A2	D3
C3B3	E3	R3A3	E3
C3B4	E3	R3A4	E3
C3B5	E3	R3A5	F3
C3B6	E3	R3A6	G3
C3B7	F3	R3A7	G3
C3B8	F3	R3A8	G3
C3B9	H3	R3A9	H3
C3C0	I3	R3B0	J3
C3C1	I3	R3B1	J3
C3C2	J3	R3B2	J3
C3C3	K3	R3B3	J3
C3C4	J5	R3B4	I4
C3C5	J5	R3B5	J7
C3C6	I5	R3B6	F9
C3C7	I6	R3B7	F9
C3C8	J6	R3B8	F9
C3C9	J7	R3B9	F9
C3E0	J8	R3C0	E9
C3E1	J8	R3C1	E10
C3E2	J9	R3C2	D9
C3E3	H9	R3C3	C9
C3E4	H9	R3C4	D1
C3E5	G9	R3C6	E2
C3E6	G9	R3C7	F2
C3E7	G10	R3C9	L6
C3E8	G9	R3E0	K6
C3E9	F10	R3E1	L6
C3F0	F9	R3E2	N6
C3F1	F10	R3E3	N6
C3F2	E9	R3E4	N9
C3F3	C9	R3E5	N9
C3F4	C9	R3E6	M9
C3F5	C9	R3E7	N10
C3F6	K6	R3E8	L10
C3F7	L6	R3E9	L9
C3F8	M6	R3F0	L9
C3F9	N6	R3F1	L9
C3G0	N6	R3F2	L5
C3G1	O6	R3F3	L4
C3G2	N10	R3F4	L4
C3G3	N9	R3F5	L4
C3G4	N10	R3F6	L5
C3G5	K9	R3F7	N5
C3G6	K9	R3F8	N4
C3G7	K5	R3F9	N4
C3G8	L5	R3G0	M2
C3G9	L5	R3G1	N2
C3H0	L5	R3G2	N3
C3H1	M3	R3G4	K2
C3H2	M3	R3G6	C5
C3H3	M3	R3K1	C7
C3H4	N3	R3K2	C7
C3H5	M2	R3K3	C7
C3H6	M2	R3K4	C7
C3H7	K2	VR3A0	J6
C3H8	K3	X3A0	F3
C3H9	K3		
C3K0	H9		

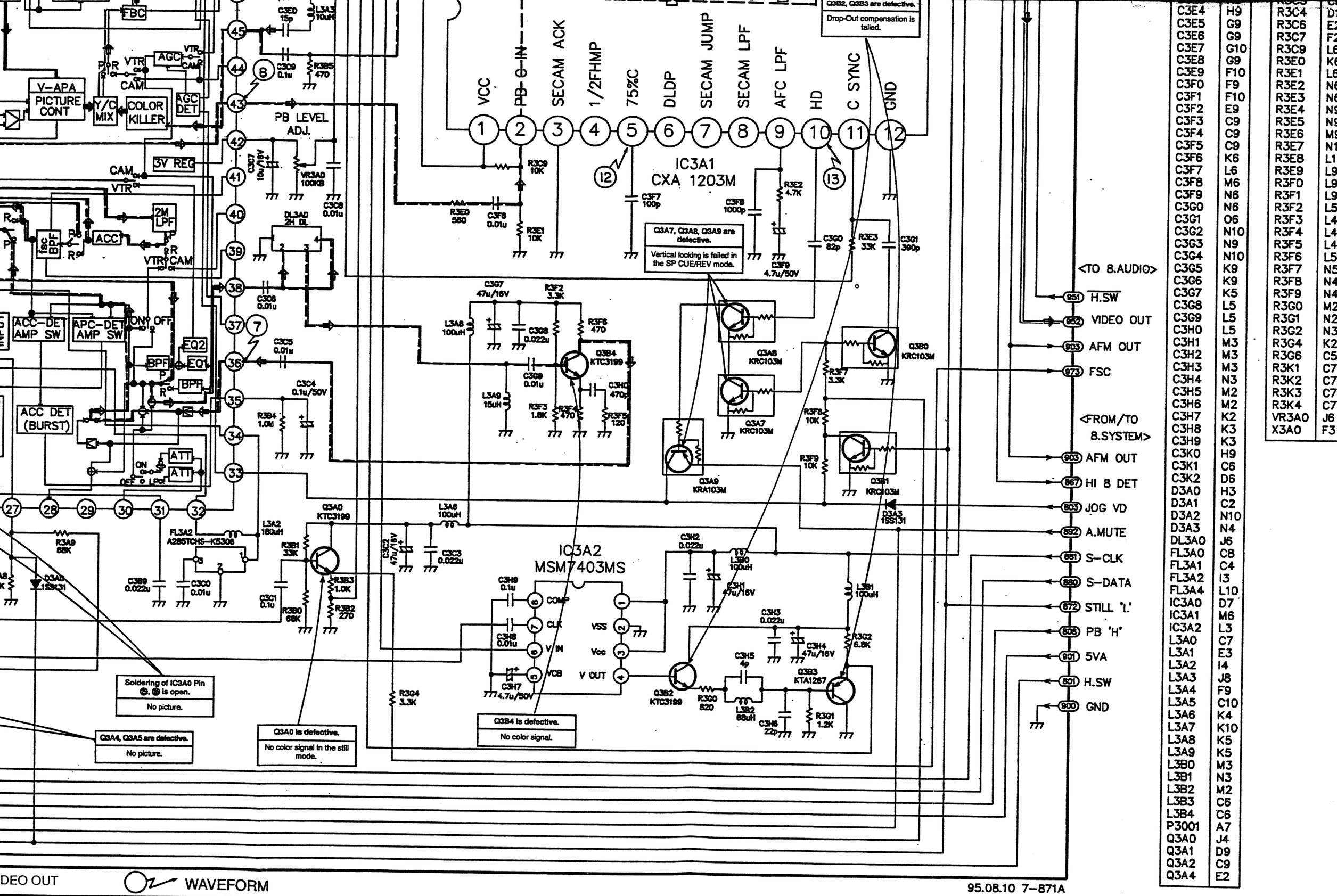

C3E4	H9
C3E5	G9
C3E6	G9
C3E7	G10
C3E8	G9
C3E9	F10
C3F0	F9
C3F1	F10
C3F2	E9
C3F3	C9
C3F4	C9
C3F5	C9
C3F6	K6
C3F7	L6
C3F8	M6
C3F9	N6
C3G0	N6
C3G1	O6
C3G2	N10
C3G3	N9
C3G4	N10
C3G5	K9
C3G6	K9
C3G7	K5
C3G8	L5
C3G9	L5
C3H0	L5
C3H1	M3
C3H2	M3
C3H3	M3
C3H4	N3
C3H5	M2
C3H6	M2
C3H7	K2
C3H8	K3
C3H9	K3
C3K0	H9
C3K1	C6
C3K2	D6
D3A0	H3
D3A1	C2
D3A2	N10
D3A3	N4
DL3A0	J6
FL3A0	C8
FL3A1	C4
FL3A2	I3
FL3A4	L10
IC3A0	D7
IC3A1	M6
IC3A2	L3
L3A0	C7
L3A1	E3
L3A2	I4
L3A3	J8
L3A4	F9
L3A5	C10
L3A6	K4
L3A7	K10
L3A8	K5
L3A9	K5
L3B0	M3
L3B1	N3
L3B2	M2
L3B3	C6
L3B4	C6
P3001	A7
Q3A0	J4
Q3A1	D9
Q3A2	C9
Q3A4	E2

R3C4	D1
R3C6	E2
R3C7	F2
R3C9	L6
R3E0	K6
R3E1	L6
R3E2	N6
R3E3	N6
R3E4	N9
R3E5	N9
R3E6	M9
R3E7	N10
R3E8	L10
R3E9	L9
R3F0	L9
R3F1	L9
R3F2	L5
R3F3	L4
R3F4	L4
R3F5	L4
R3F6	L5
R3F7	N5
R3F8	N4
R3F9	N4
R3G0	M2
R3G1	N2
R3G2	N3
R3G4	K2
R3G6	C5
R3K1	C7
R3K2	C7
R3K3	C7
R3K4	C7
VR3A0	J6
X3A0	F3

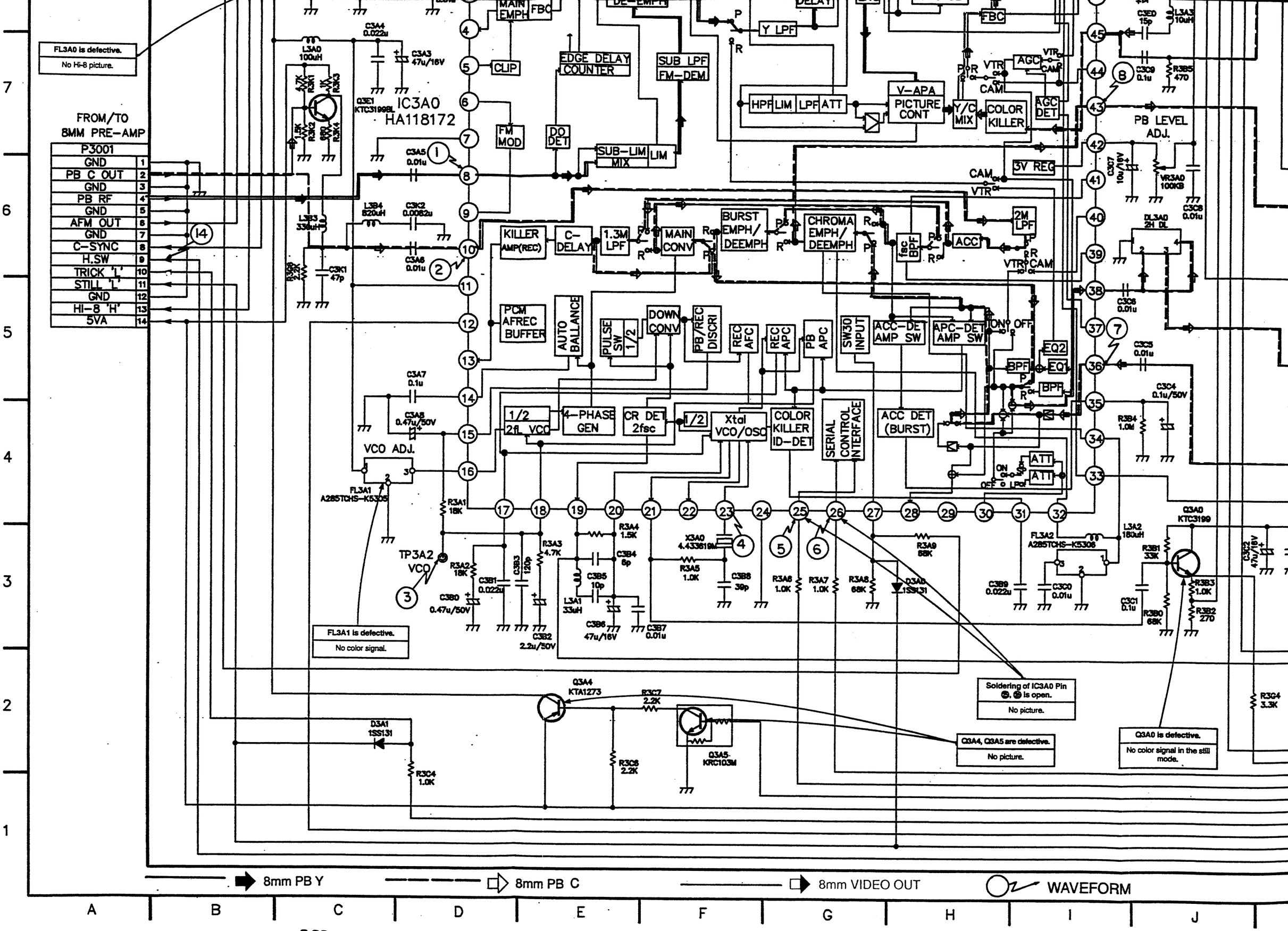
FL3A0 is defective.
No Hi-8 picture.
FROM/TO
8MM PRE-AMP
P3001
GND 1
PB C OUT 2
GND 3
PB RF 4
GND 5
AFM OUT 6
GND 7
C-SYNC 8
H.SW 9
TRICK 'L' 10
STILL 'L' 11
GND 12
HI-8 'H' 13
5VA 14
IC3A0
HA118172
MAIN EMPH
FBC
CLIP
EDGE DELAY COUNTER
SUB LPF
FM-DEM
FM MOD
DO DET
SUB-LIM MIX
LIM
Y LPF
DELAY
HPF
LIM
LPF
ATT
V-APA
PICTURE CONT
Y/C MIX
COLOR KILLER
AGC DET
AGC
VTR
CAM
PB LEVEL ADJ.
3V REG
KILLER AMP(REC)
C-DELAY
1.3M LPF
MAIN CONV
BURST EMPH/ DEEMPH
CHROMA EMPH/ DEEMPH
fsc BPF
ACC
2M LPF
DL3A0 2H DL
PCM AFREC BUFFER
AUTO BALLANCE
PULSE SW 1/2
DOWN CONV
PB/REC DISCRI
REC AFC
REC APC
PB APC
SW30 INPUT
ACC-DET AMP SW
APC-DET AMP SW
ON OFF
EQ2
EQ1
BPF
ATT
1/2 2fl VCO
4-PHASE GEN
CR DET 2fsc
1/2
Xtal VCO/OSC
COLOR KILLER ID-DET
SERIAL CONTROL INTERFACE
ACC DET (BURST)
VCO ADJ.
FL3A1 A285TCHS-K5305
TP3A2 VCO
FL3A1 is defective.
No color signal.
Q3A0 KTC3199
FL3A2 A285TCHS-K5306
Q3A4 KTA1273
Q3A5 KRC103M
D3A1 1SS131
Q3A1 KTC3199BL
Soldering of IC3A0 Pin 25, 26 is open.
No picture.
Q3A4, Q3A5 are defective.
No picture.
Q3A0 is defective.
No color signal in the still mode.
8mm PB Y
8mm PB C
8mm VIDEO OUT
WAVEFORM

* **8mm Y/C Waveform** (When taking a photograph of waveform, set probe of oscilloscope to 10:1)

① 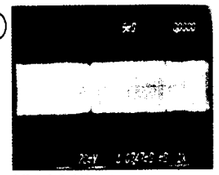
IC3A0 Pin ⑧
PB RF
(20mV/5msec)

②
IC3A0 Pin ⑩
PB COLOR
(5mV/20μsec)

③ 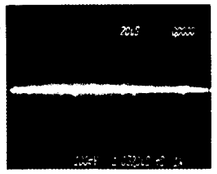
IC3A0 Pin ⑱ (TP3A2)
PB Color VCO
(100mV/20μsec)

④ 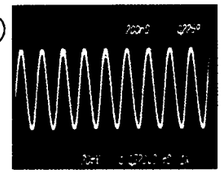
IC3A0 Pin ㉓
PB Fsc
(20mV/200nsec)

⑤ 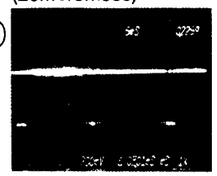
IC3A0 Pin ㉕
Serial DATA
(200mV/5msec)

⑥ 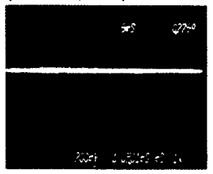
IC3A0 Pin ㉖
Serial CLOCK
(200mV/5msec)

⑦ 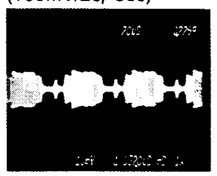
IC3A0 Pin ㊱
PB COLOR
(10mV/20μsec)

⑧ 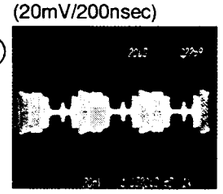
IC3A0 Pin ㊸
PB Color
(20mV/20μsec)

⑨ 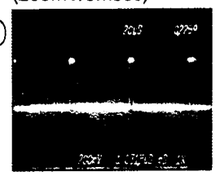
IC3A0 Pin ㊼
C-SYNC
(200mV/20μsec)

⑩ 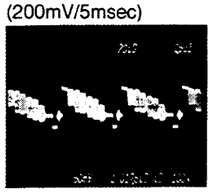
IC3A0 Pin ㊶ (TP3A1)
VIDEO OUT
(50mV/20μsec)

⑪ 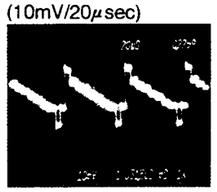
IC3A0 Pin ㊹
Y-CCD IN
(10mV/20μsec)

⑫ 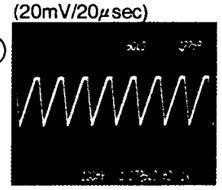
IC3A1 Pin ⑤
75%C Port
(100mV/50μsec)

⑬ 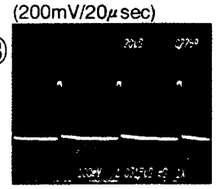
IC3A1 Pin ⑩
HD Port
(100mV/20μsec)

⑭ 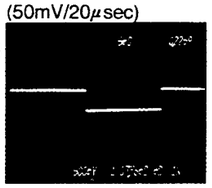
P3001 Pin ⑨
H.SW
(500mV/5msec)

* **8mm Y/C TR Voltage Sheet**

TR No. \ Port	Emitter	Collector	Base	Mode
Q3A0	2.9	5.3	3.5	
Q3A1	0.0	0.0	4.3	Hi-8 PB
	0.0	4.4	0.0	Normal PB
Q3A2	0.0	0.0	0.0	Hi-8 PB
	0.0	0.0	4.4	Normal PB
Q3A4	5.3	5.2	4.6	PB
Q3A5	0.0	0.0	5.3	PB
Q3A7	0.0	0.0	0.0	PB
	0.0	2.9	0.4	Still
	0.0	2.4	0.9	Cue/Rev
Q3A8	0.0	0.4	0.0	PB
	2.9	4.3	0.1	Still
	2.4	5.2	0.3	Cue/Rev
Q3A9	0.0	0.9	0.4	PB
	4.3	0.9	4.3	Still
	5.3	1.0	5.2	Cue/Rev
Q3B0	0.0	0.2	0.0	PB
	0.0	0.2	0.4	Still
	0.0	0.2	0.9	Cue/Rev
Q3B1	0.0	0.0	5.3	PB
	0.0	0.7	0.2	Still
	0.0	0.0	5.3	Cue/Rev
Q3B2	3.0	5.2	3.6	PB
Q3B3	2.4	0.0	1.8	PB
Q3B4	1.2	4.0	1.8	PB

* **8mm Y/C IC Voltage Sheet**

PB mode

	0.0	2.0	1.2	3.3	1.2	2.6	2.1	5.1	2.1	3.1	2.4	3.2	1.5	2.2	1.3	3.1	
2.5	1					60				55					50		1.4
5.0	2 PIN Hi-8 : 0.0 64 PIN Hi-8 : 4.3																0.4
0.5																	2.9
0.7															45		2.2
2.0	5																2.9
0.6																	2.2
0.0																	3.0
3.0																	2.1
4.2															40		2.3
2.3	10																2.2
5.1																	1.8
0.0																	1.9
0.0																	3.0
2.3															35		2.9
2.2	15																2.1
5.1					20				25					30			0.8
	2.5	2.5	2.5	2.5	3.0	2.2	2.8	0.0	5.1	5.4	1.3	2.2	0.0	3.0	1.1	2.1	

IC3A0
(HA118172)

PB mode

1.5	5.2	4.7	2.7	0.1	5.2	0.7	4.8	1.9	2.2	2.2	4.3
24				20					15		
1				5					10		
5.2	2.5	0.1	0.0	2.7	0.0	2.1	2.6	2.1	1.0	0.6	0.0

IC3A1 (CXA1203M)

PB mode

8.6	2.7	2.2	2.2
8			5
1			
5.3	0.0	5.3	3.7

IC3A2
(M7403)

2-3. Audio Circuit Diagram

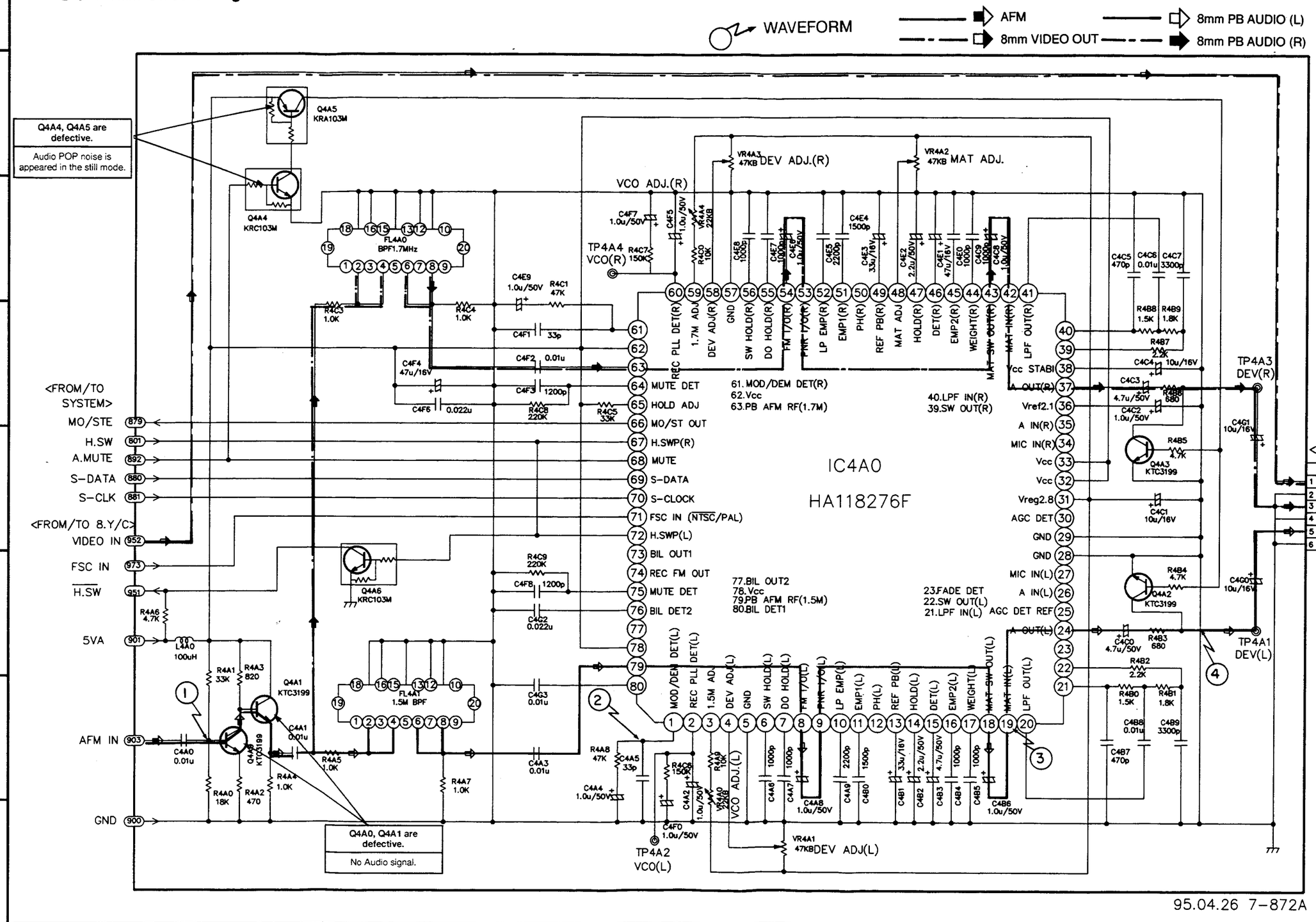

LOCATION GUIDE

C4A0	B2
C4A1	C2
C4A2	F1
C4A3	E2
C4A4	E2
C4A5	E2
C4A6	G1
C4A7	G1
C4A8	G1
C4A9	G1
C4B0	G1
C4B1	H1
C4B2	H1
C4B3	H1
C4B4	H1
C4B5	H1
C4B6	H1
C4B7	I2
C4B8	J2
C4B9	J2
C4C0	I3
C4C1	J4
C4C2	I5
C4C3	I5
C4C4	J5
C4C5	I6
C4C6	J6
C4C7	J6
C4C8	H6
C4C9	H6
C4E0	H6
C4E1	H6
C4E2	H6
C4E3	G6
C4E4	G6
C4E5	G6
C4E6	G6
C4E7	G6
C4E8	F6
C4E9	E6
C4F0	F1
C4F1	E5
C4F2	E5
C4F3	E5
C4F4	D5
C4F5	F6
C4F6	D5
C4F7	E6
C4F8	E3
C4G0	J3
C4G1	J5
C4G2	E3
C4G3	E2
FL4A0	D6
FL4A1	D2
IC4A0	G4
L4A0	B3
P4V02	K4
Q4A0	B2
Q4A1	C2
Q4A2	J3
Q4A3	J4
Q4A4	B6
Q4A5	C7
Q4A6	C3
R4A0	B2
R4A1	B3
R4A2	B2
R4A3	B3
R4A4	C2
R4A5	C2
R4A6	B3
R4A7	D2
R4A8	E2
R4A9	F2
R4B0	I2
R4B1	J2
R4B2	J3
R4B3	J3
R4B4	J3
R4B5	J4
R4B6	J5
R4B7	J5
R4B8	J5
R4B9	J5
R4C0	F6
R4C1	E6
R4C3	C5
R4C4	D5
R4C5	E5
R4C6	F2
R4C7	F6
R4C8	E5
R4C9	E3
VR4A0	F1
VR4A1	G1
VR4A2	H7
VR4A3	F7
VR4A4	F6

• **8mm AUDIO Waveform** (When taking a photograph of waveform, set probe of oscilloscope to 10:1)

①

Q4A0 Base
AFM IN
(20mV/5msec)

② 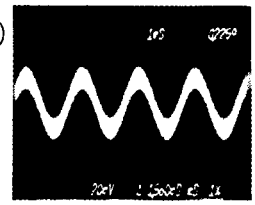

IC4A0 Pin ①
Mod/Dem DET (L)
(20mV/1msec)

③ 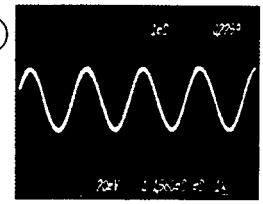

IC4A0 Pin ⑲
MAT IN (L)
(20mV/1msec)

④ 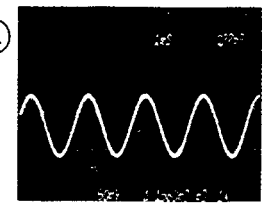

P4V02 Pin ⑤
AUDIO (L) OUT
(50mV/1msec)

• **8mm Audio TR Voltage Sheet** PB mode

TR No. \ Port	Emitter	Collector	Base
Q4A0	1.2	3.2	1.8
Q4A1	2.6	5.2	3.2
Q4A2	0.0	0.0	0.0
Q4A3	0.0	0.0	0.0
Q4A4	0.0	5.2	0.0
Q4A5	5.3	0.0	5.2
Q4A6	0.0	2.6	2.6

* **8mm Audio IC Voltage Sheet** PB mode

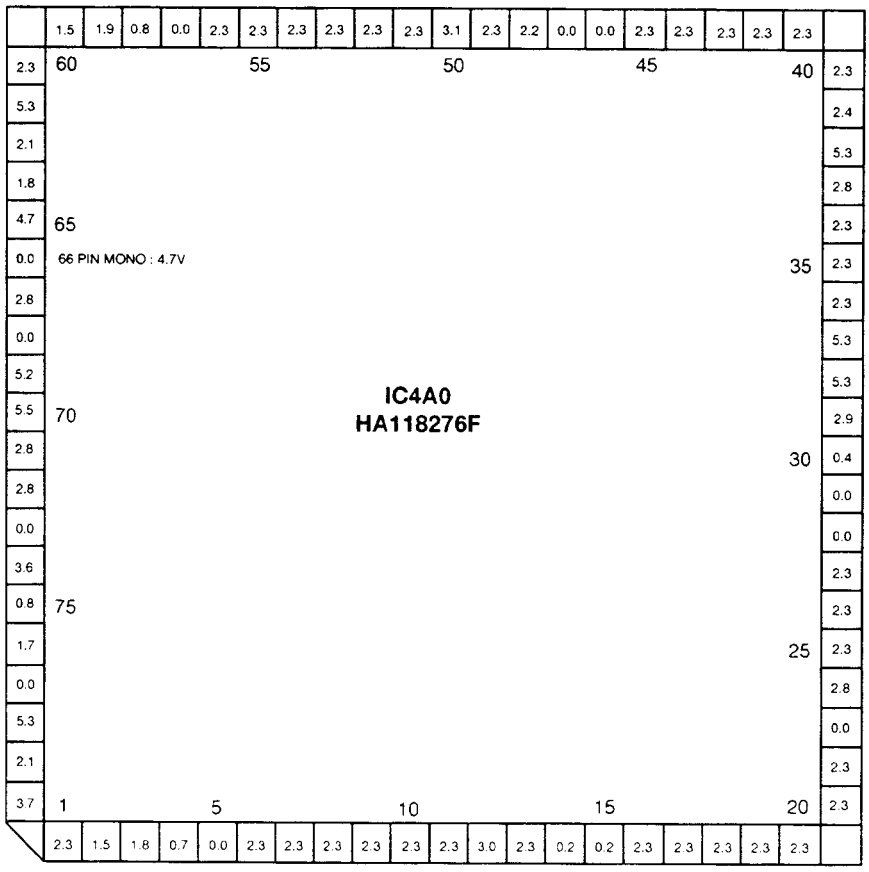

* **8mm Pre-Amp TR Voltage Sheet**

TR No. \ Port	Emitter	Collector	Base	Mode
Q001	2.4	5.1	3.1	
Q002	1.7	5.1	2.4	
Q003	0.0	0.0	4.9	PB
	0.0	3.6	0.1	Cue/Rev
Q005	0.0	0.0	5.1	PB
	0.0	4.4	0.2	Still
Q006	3.4	1.8	2.7	
Q007	2.7	5.2	3.3	
Q008	2.0	5.1	2.7	
Q009	1.2	5.2	1.8	Normal PB
	3.3	5.1	1.8	Hi-8 PB
Q010	1.1	5.1	1.8	
Q011	3.3	5.1	4.0	
Q012	4.0	1.1	3.3	
Q013	0.0	0.0	1.2	Normal PB
	3.3	5.1	4.0	Hi-8 PB
Q014	5.2	0.0	5.2	Normal PB
	5.2	5.1	4.4	Hi-8 PB
Q015	0.0	5.2	0.0	Normal PB
	0.0	0.1	4.2	Hi-8 PB

* **8mm Pre-Amp IC Voltage Sheet**

PB mode

0.1	0.1	0.3	1.8	1.5	3.7	0.0	3.1	3.9	0.2	2.3	2.6	5.1	5.1	5.2
30					25					20				
					IC001 (HA118191NT)									
1				5					10					15
2.2	0.0	0.7	0.0	0.0	3.2	0.0	0.0	2.1	0.0	0.7	0.0	0.7	0.0	2.1

3. Connection Diagram

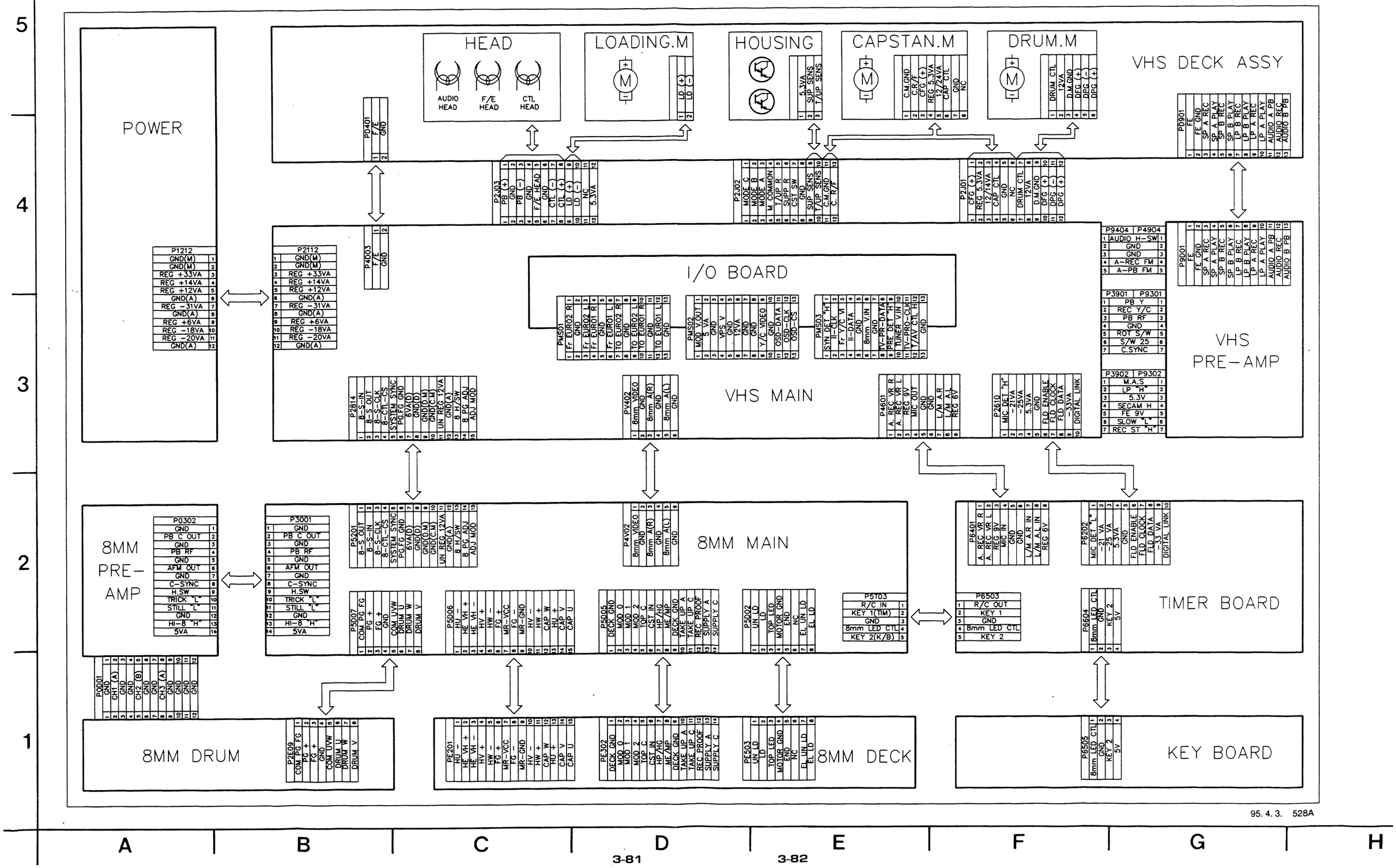

2-4. Pre-Amp Circuit Diagram

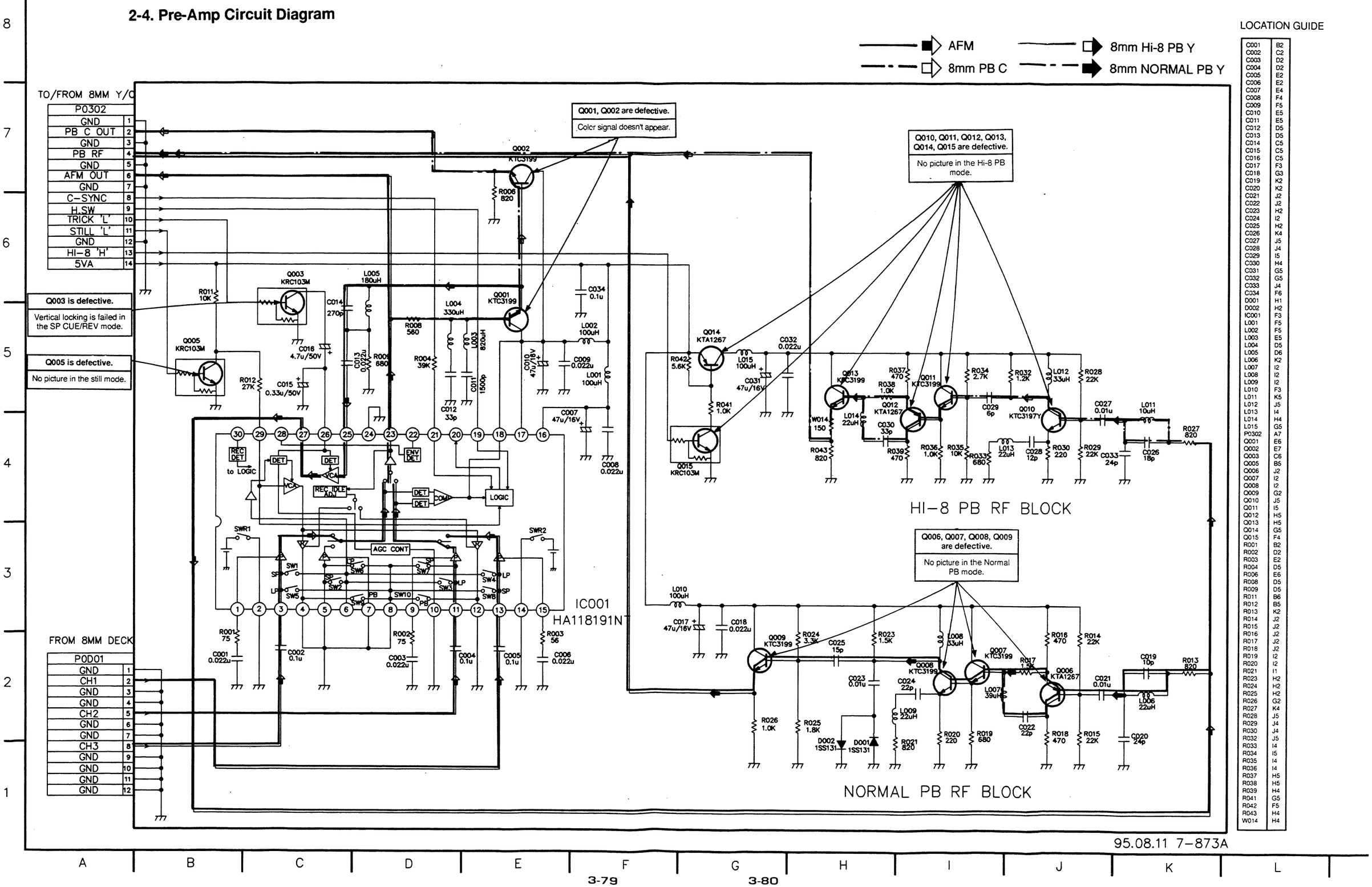

LOCATION GUIDE

C001	B2
C002	C2
C003	D2
C004	D2
C005	E2
C006	E2
C007	E4
C008	F4
C009	F5
C010	E5
C011	E5
C012	D5
C013	D5
C014	C5
C015	C5
C016	C5
C017	F3
C018	G3
C019	K2
C020	K2
C021	J2
C022	J2
C023	H2
C024	I2
C025	H2
C026	K4
C027	J5
C028	J4
C029	I5
C030	H4
C031	G5
C032	G5
C033	J4
C034	F6
D001	H1
D002	H2
IC001	F3
L001	F5
L002	F5
L003	E5
L004	D5
L005	D6
L006	K2
L007	I2
L008	I2
L009	I2
L010	F3
L011	K5
L012	J5
L013	I4
L014	H4
L015	G5
P0302	A7
Q001	E6
Q002	E7
Q003	C6
Q005	B5
Q006	J2
Q007	I2
Q008	I2
Q009	G2
Q010	J5
Q011	I5
Q012	H5
Q013	H5
Q014	G5
Q015	F4
R001	B2
R002	D2
R003	E2
R004	D5
R006	E6
R008	D5
R009	D5
R011	B6
R012	B5
R013	K2
R014	J2
R015	J2
R016	J2
R017	J2
R018	J2
R019	I2
R020	I2
R021	I1
R023	H2
R024	H2
R025	H2
R026	G2
R027	K4
R028	J5
R029	J4
R030	J4
R032	J5
R033	I4
R034	I5
R035	I4
R036	I4
R037	H5
R038	H5
R039	H4
R041	G5
R042	F5
R043	H4
W014	H4

PRINTED CIRCUIT BOARD DIAGRAMS

1. VHS Printed Circuit Board

1-1. Main P.C.Board

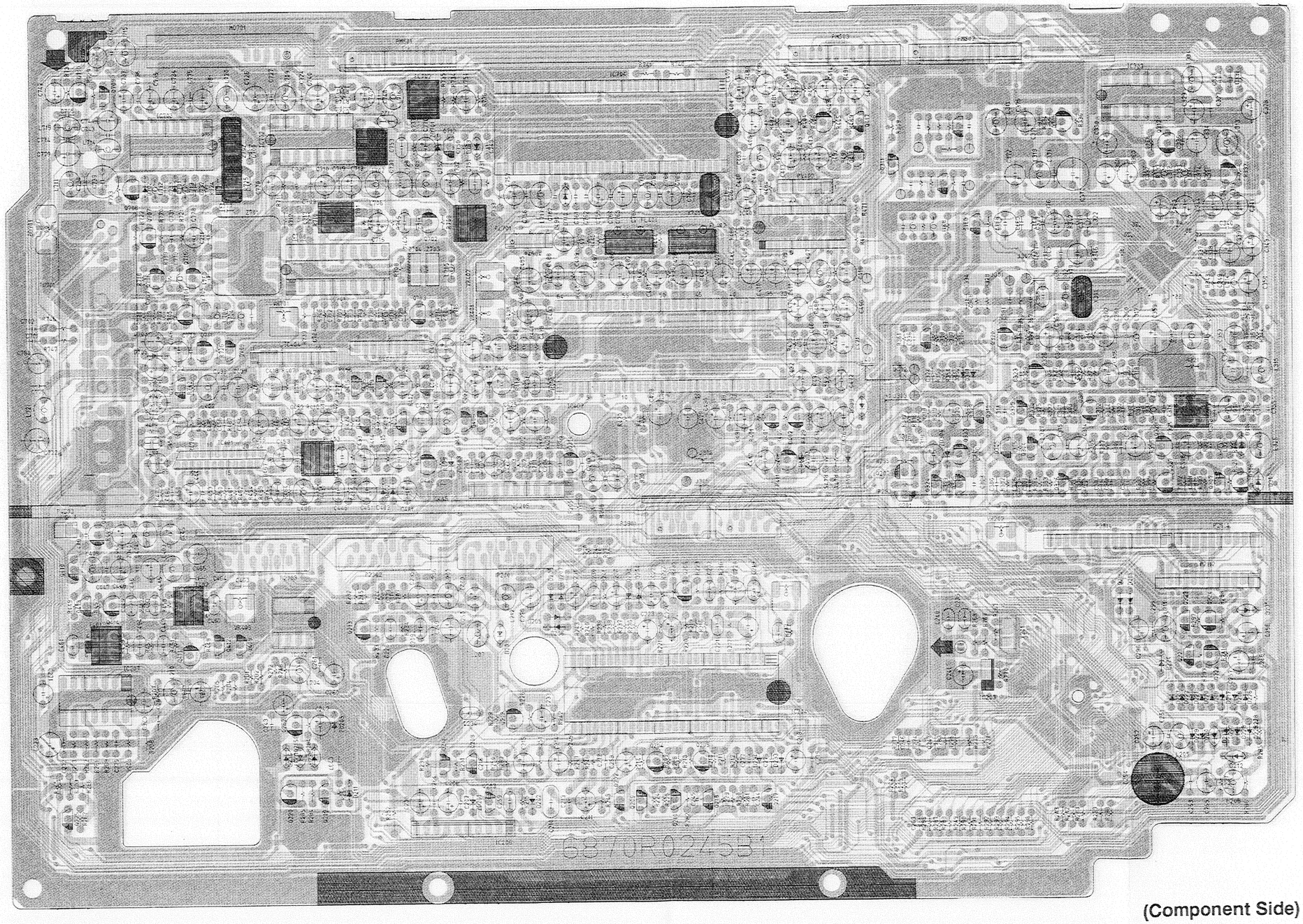

(Component Side)

Main P.C.Board

NOTE) ● : MEASUREMENT POINT
□ : ADJUSTMENT POINT
Emitter : TRANSISTOR
Collector
Base

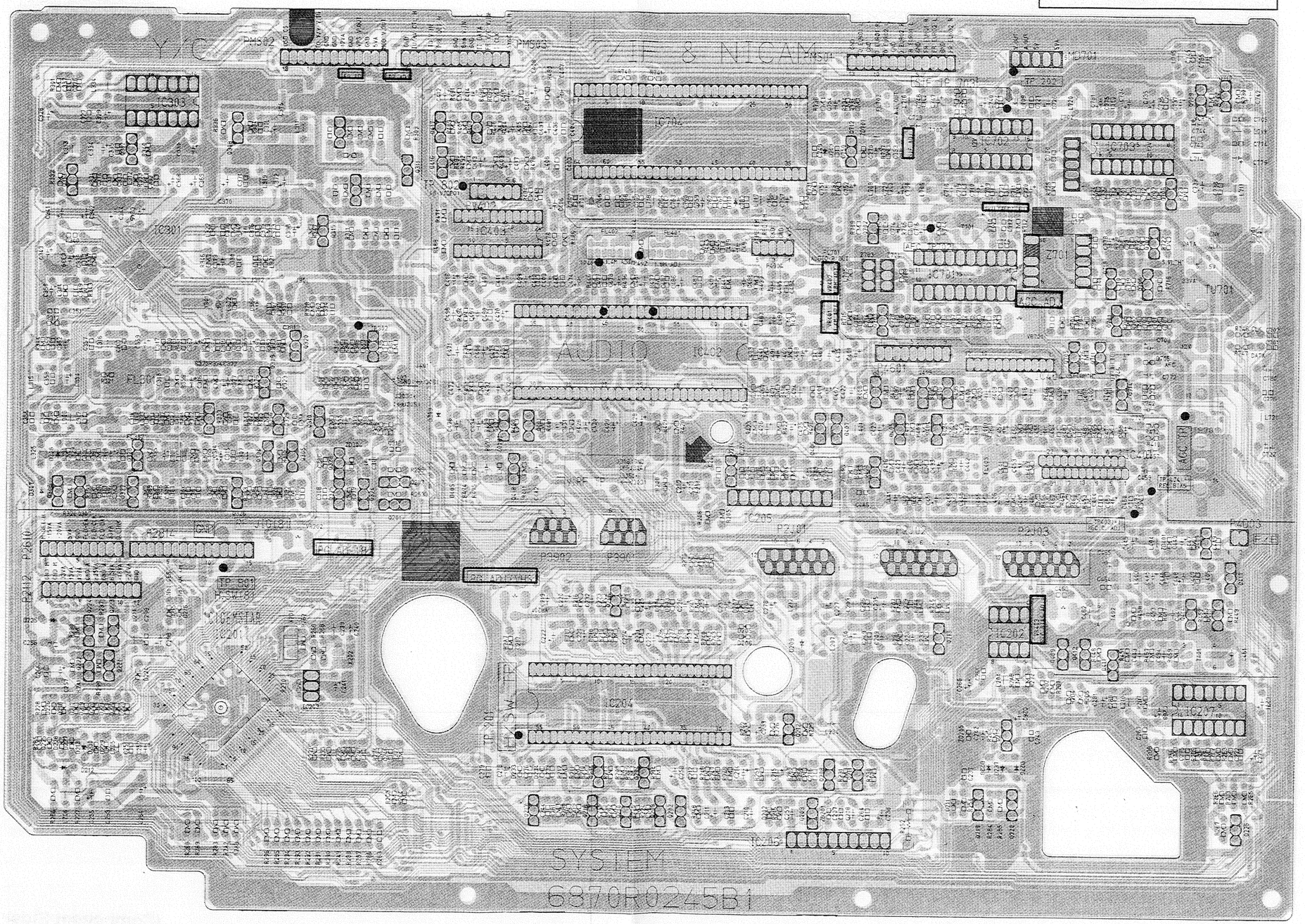

(Solder Side)

1-5. Deck Junction P.C.Board

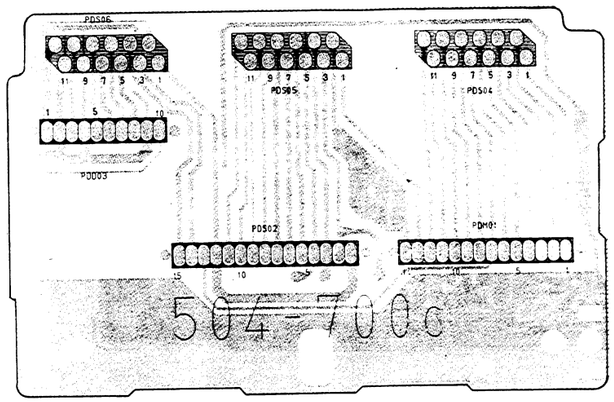

(Solder Side)

1-6. Scart In/Out P.C.Board

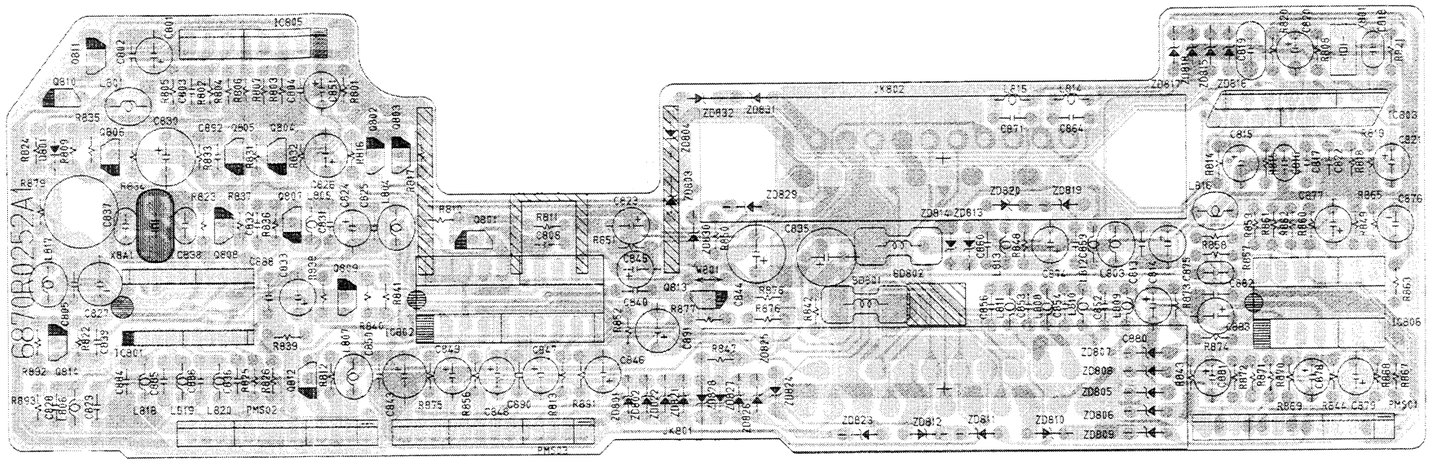

(Component Side)

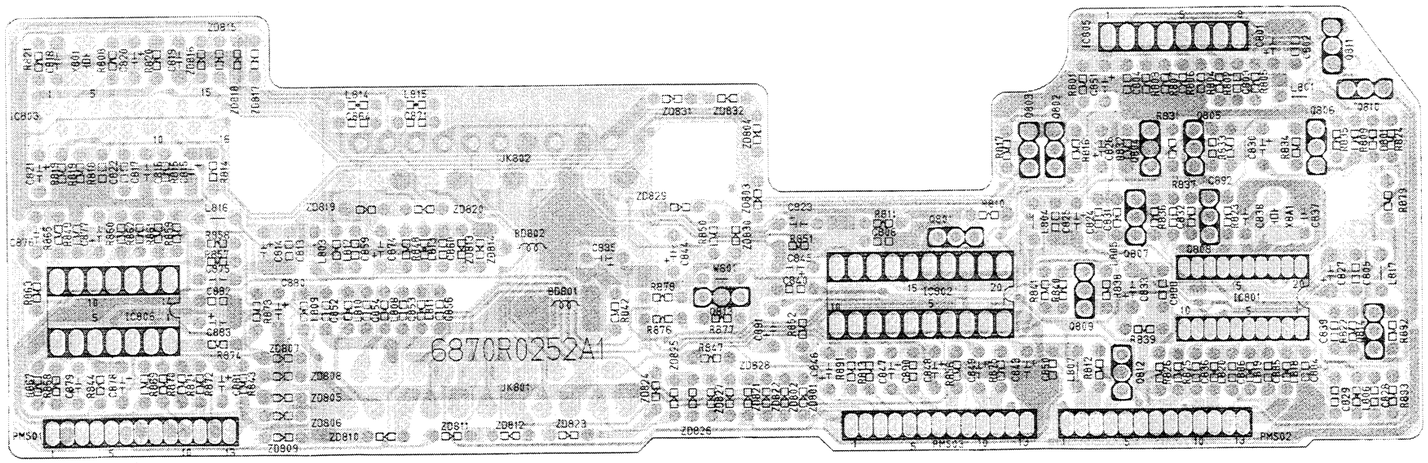

(Solder Side)

1-2. Power P.C.Board

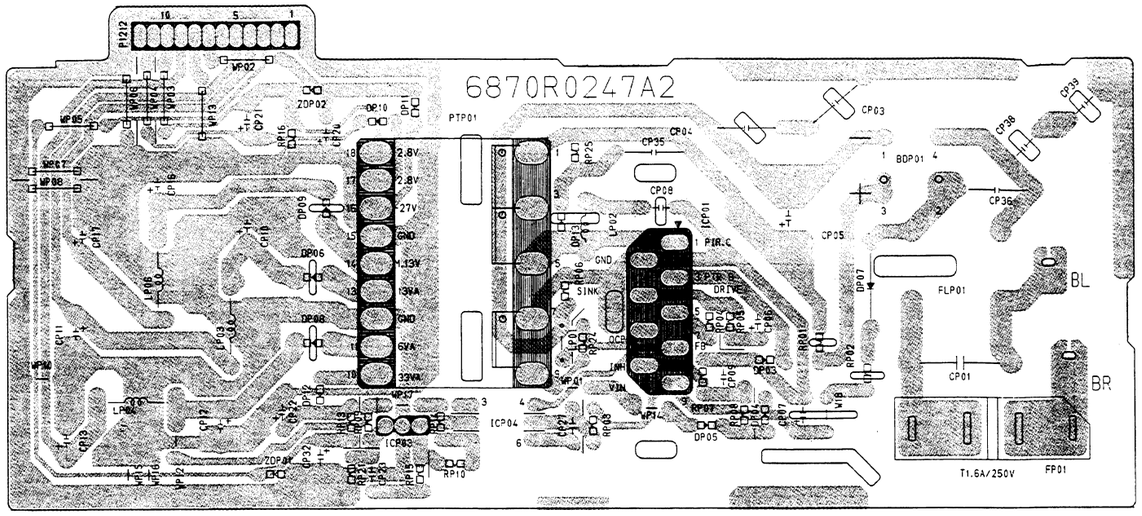

(Solder Side)

1-3. Pre-Amp P.C.Board

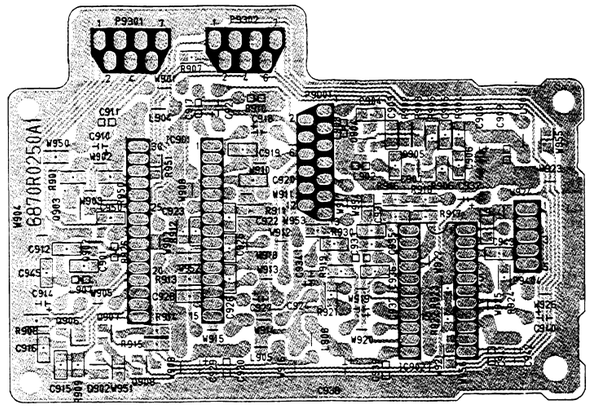

(Solder Side)

1-4. Timer (I) P.C.Board

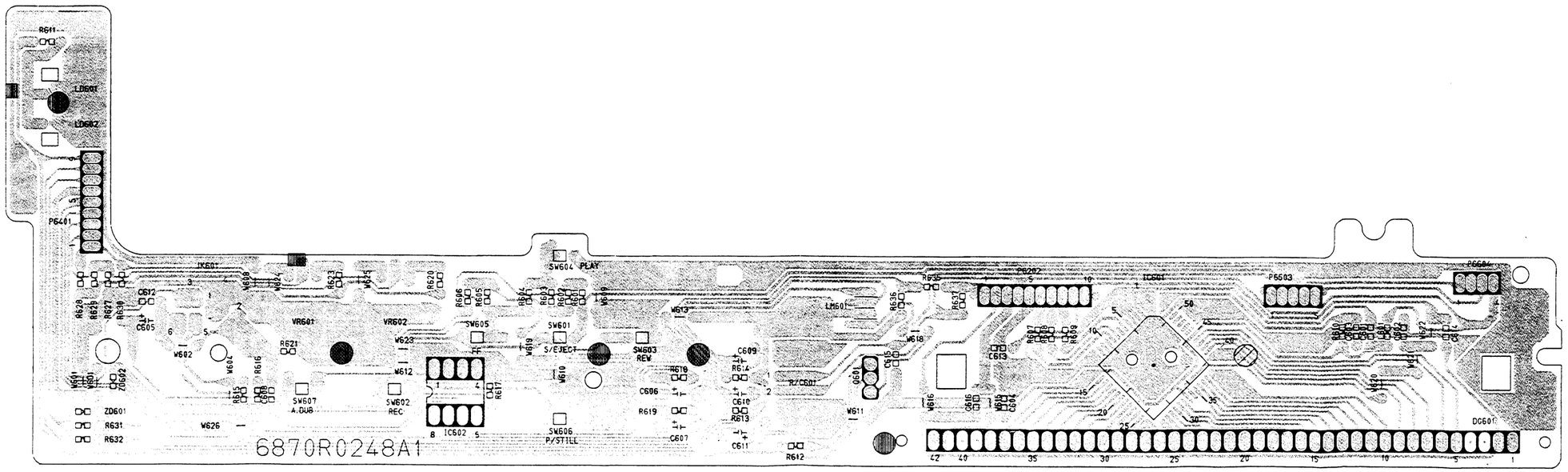

(Solder Side)

Main P.C.Board

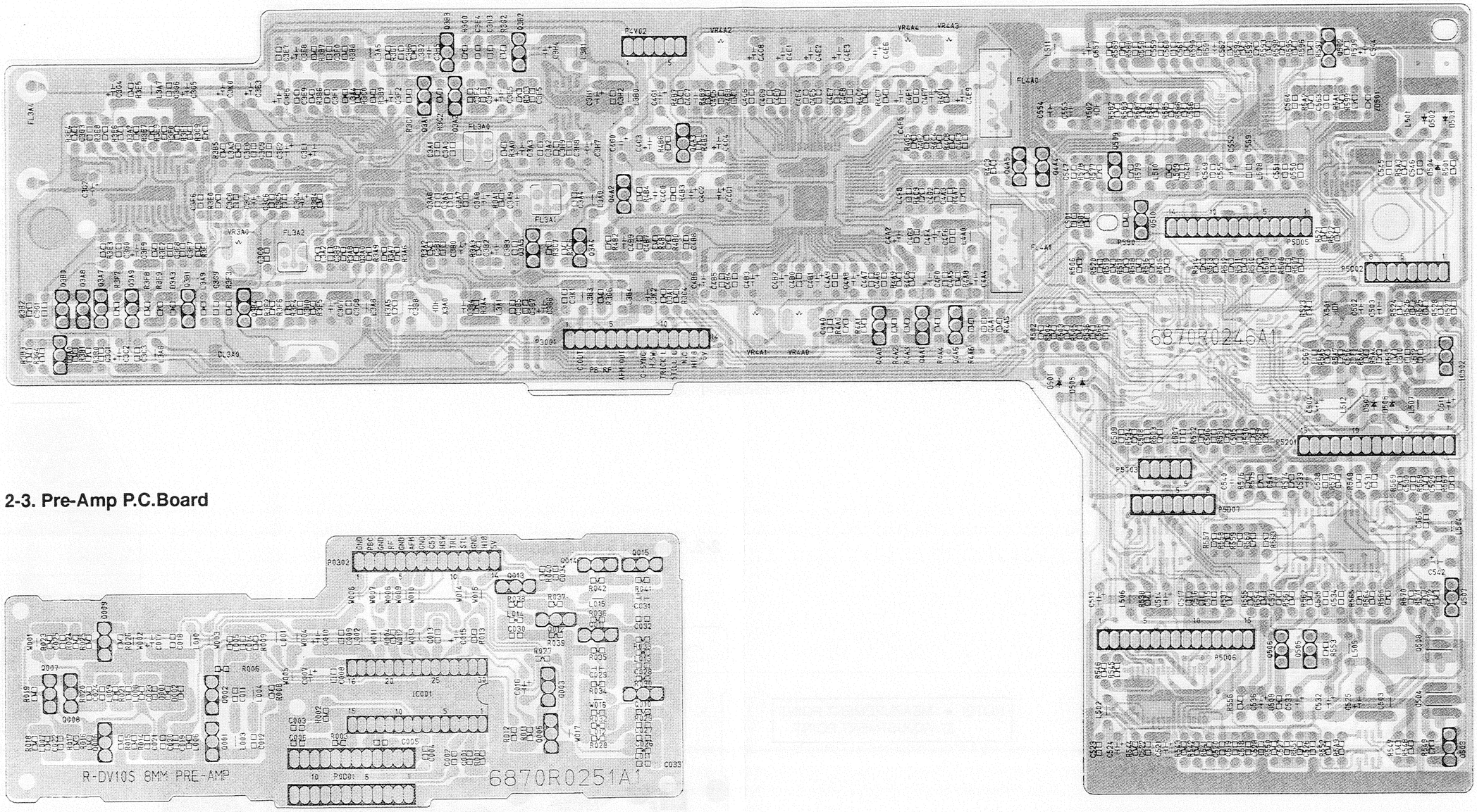

(Solder Side)

2-3. Pre-Amp P.C.Board

(Solder Side)

2. 8mm Printed Circuit Board

2-1. Main P.C.Board

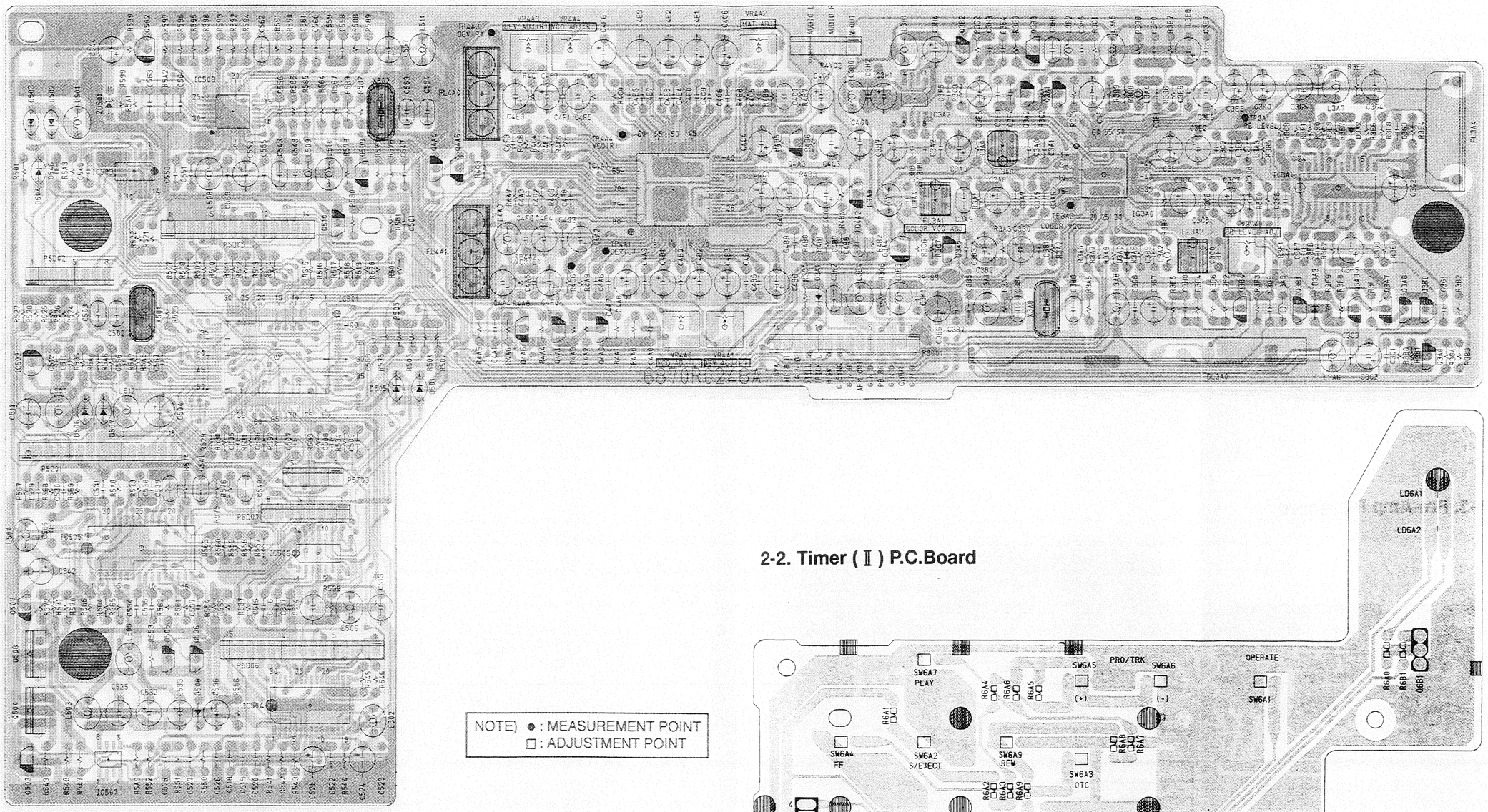

(Component Side)

NOTE) ● : MEASUREMENT POINT
□ : ADJUSTMENT POINT

2-2. Timer (Ⅱ) P.C.Board

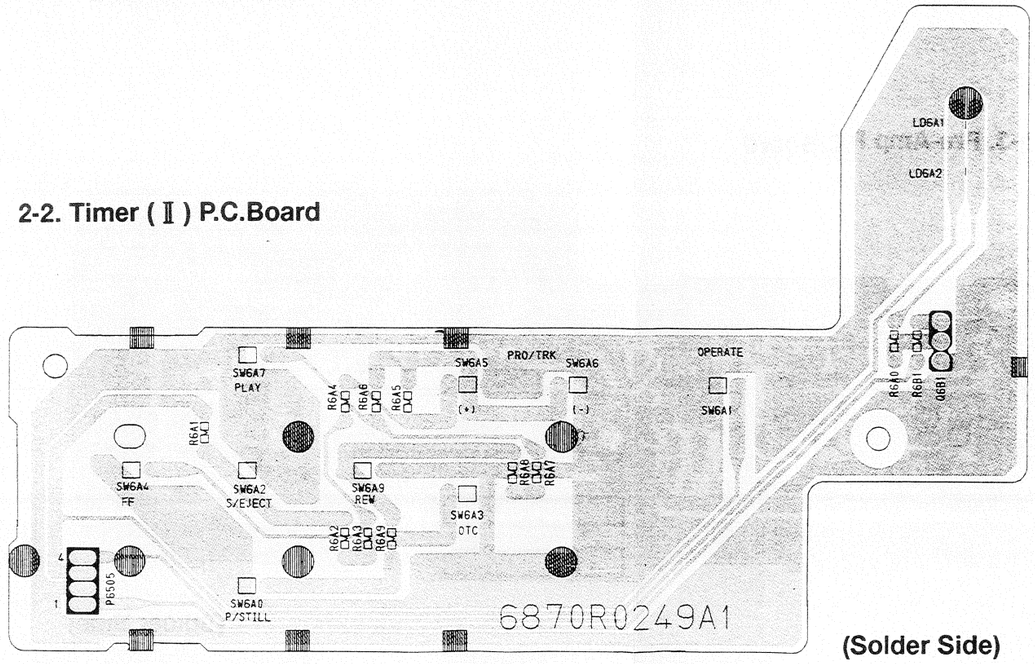

(Solder Side)

2-4. Deck Junction P.C.Board

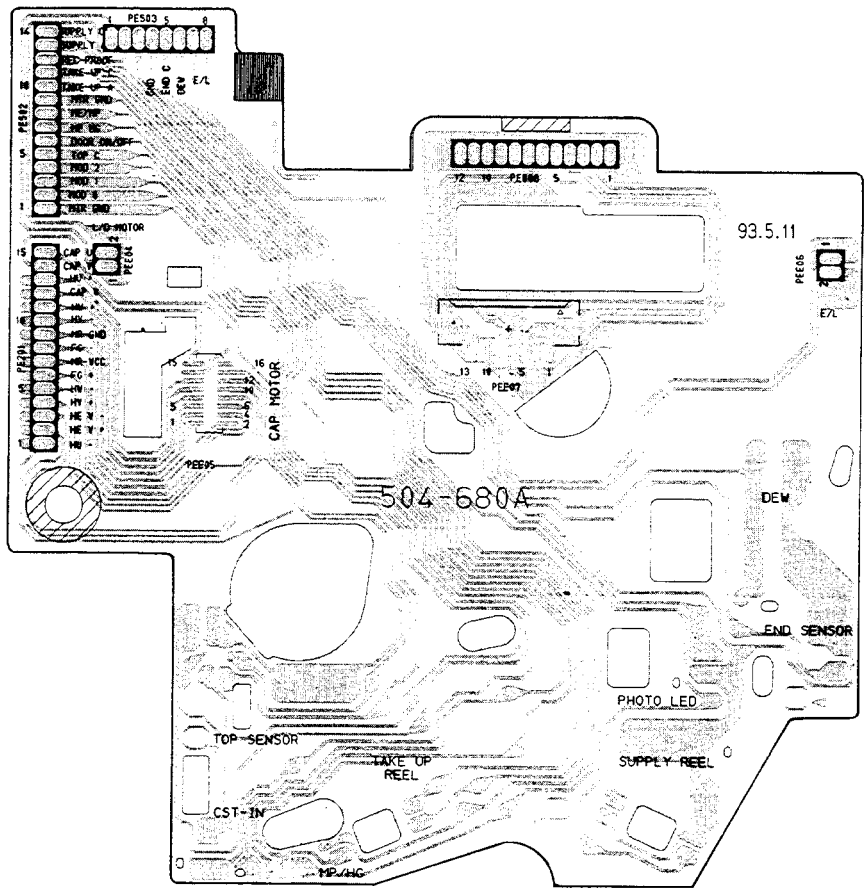

(Solder Side)

MEMO

SECTION 4
MECHANISM

CONTENTS

SECTION 4-1
VHS DECK MECHANISM

SECTION 4-2
8mm DECK MECHANISM

SECTION 4-1. VHS DECK MECHANISM

FRONT LOADING MECHANISM DISASSEMBLY

• Front Loading Mechanism Parts Location

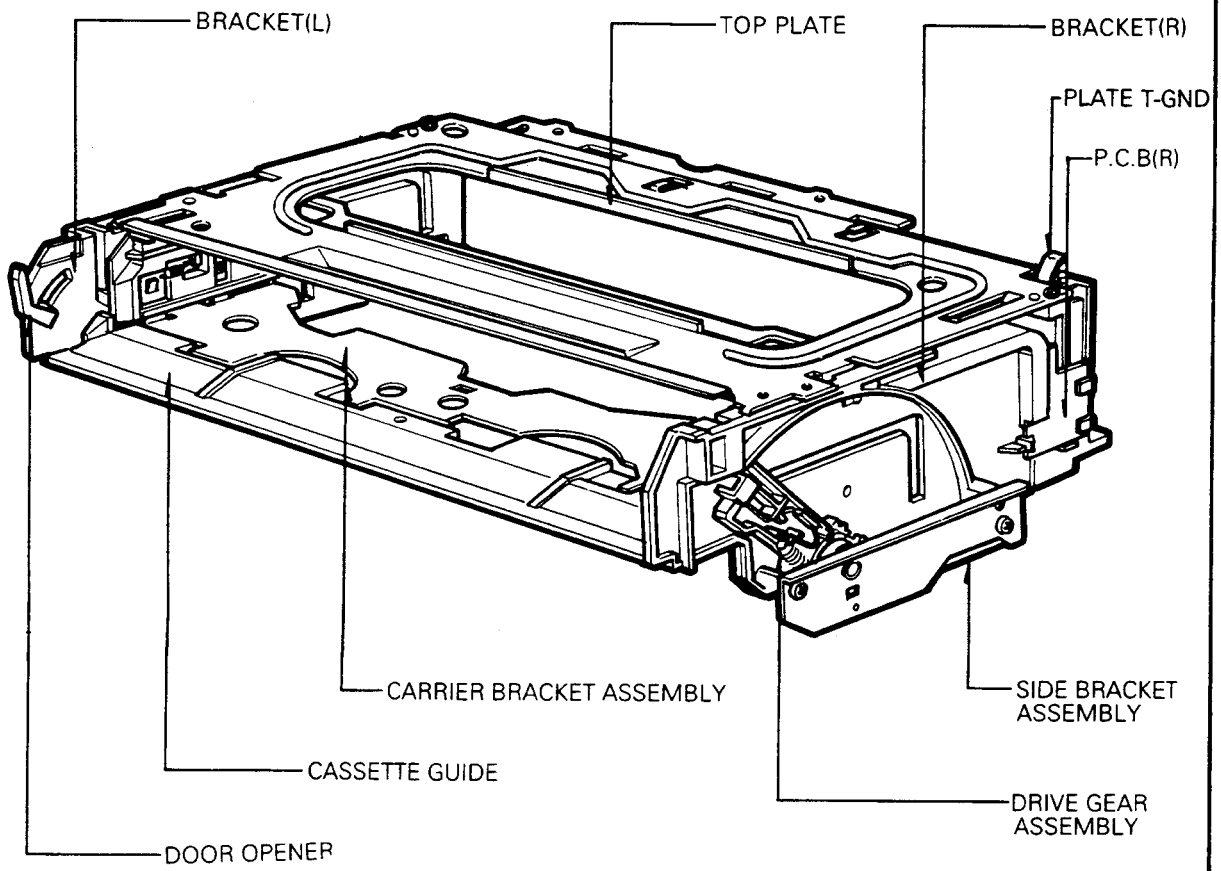

Front Loading Mechanism Parts Location

1. Component list below will be discribed as if the top and bottom covers and the front panel have already been removed.
2. P.C.B Assembly
3. Top Plate
4. Carrier Bracket Assembly
5. Cassette Guide
6. Side Bracket Assembly
7. Bracket(L), (R)
8. Door Opener
9. Drive Gear Assembly

1. Front Loading Mechanism Assembly (Fig. A-1-1)

1) Remove the Top and Bottom Covers and the Front panel.
2) Unplug the connector.
3) Remove two screws(A).
4) Lift up the Front Loading Mechanism in the direction of arrow(C).

*** NOTE**

1) When disassembling and reassembling

① Give special attention to removal and to reassemble, because two tabs(D) are engaged.

② Make sure that Bosses of Bracket(L),(R) are properly engaged in the holes of the chassis.

③ To reassemble Front Loading Mechanism, the Drive Gear Assembly should be turned in a counterclockwise as shown in Fig. A-1-2 so that the Rack Gear N.D of Front Loading Mechanism Assembly is meshed into Rack Gear F.L of Deck Mechanism Assembly correctly as shown in Fig. A-1-1.(B).

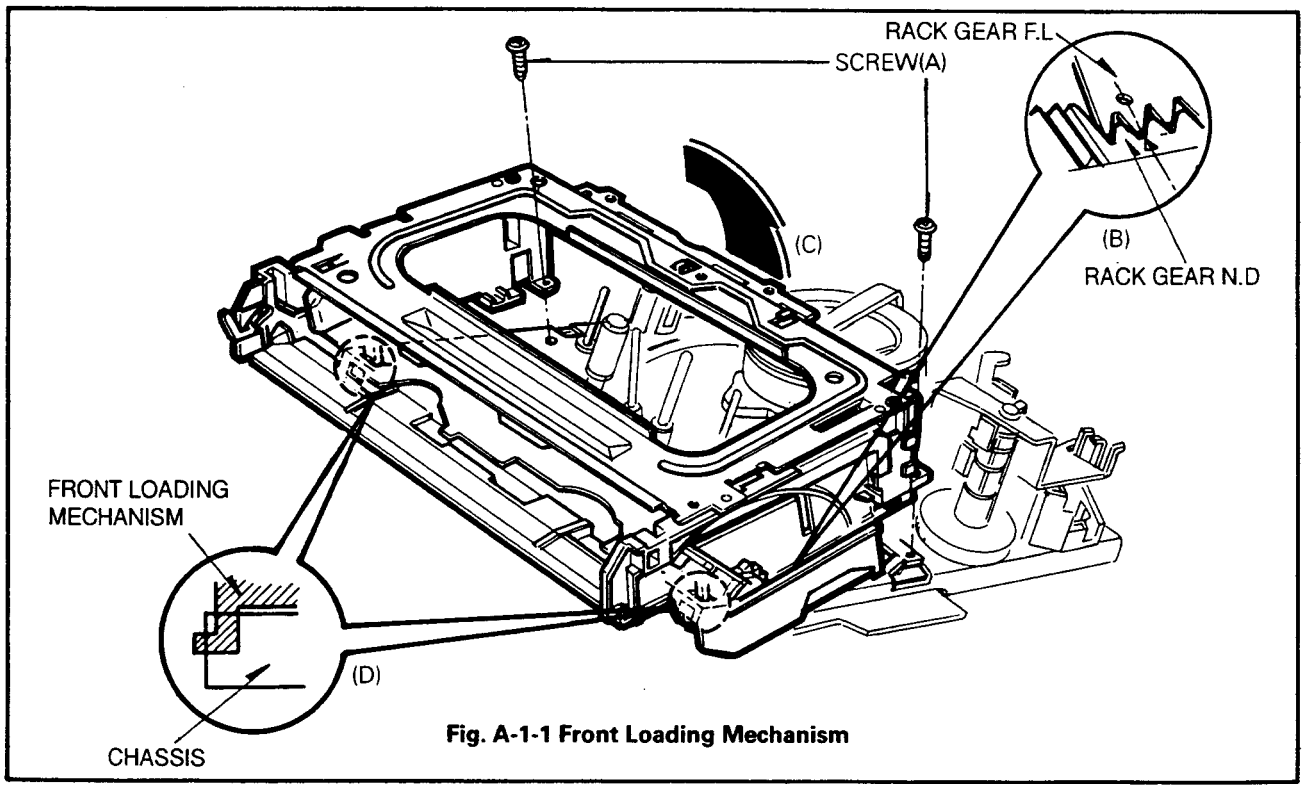

Fig. A-1-1 Front Loading Mechanism

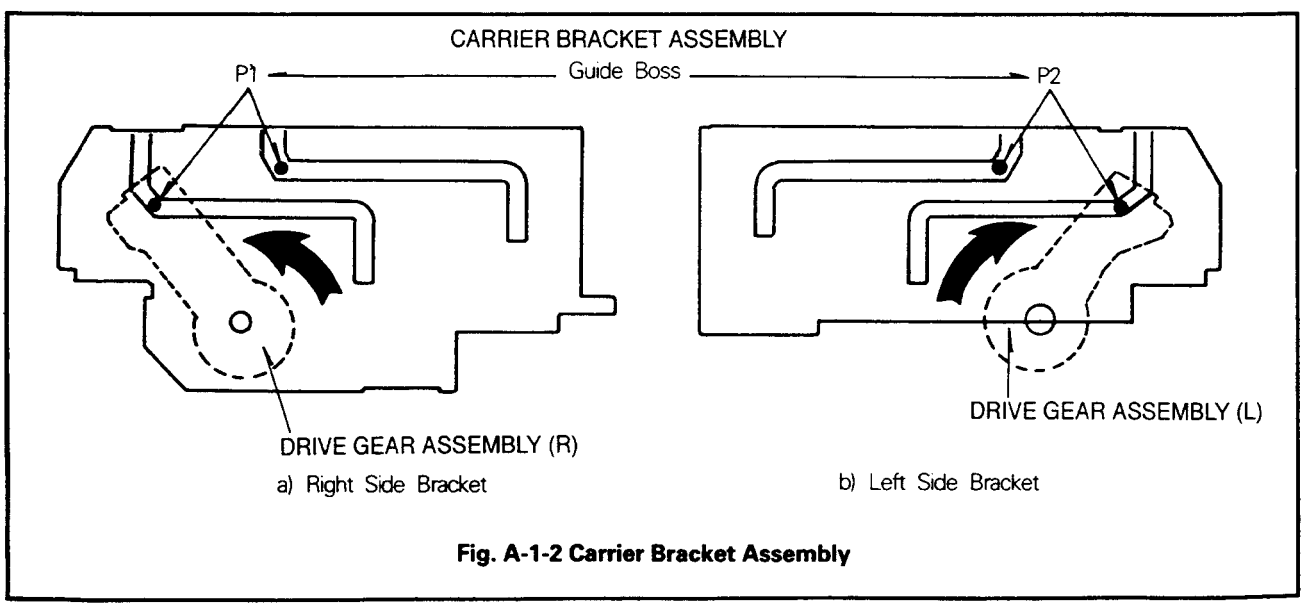

Fig. A-1-2 Carrier Bracket Assembly

2. PCB(Printed Circuit Board) Assembly

2-1. P.C.B Assembly(R)(Fig. A-2)

1) Remove the PCB Assembly(R) by pushing three Hooks (A) outward.
2) Release the Lead wire from stoppers.

2-2. PCB Assembly(L).(Fig. A-2)

1) Remove the PCB Assembly(L) by pushing the Hook(B) outward.
2) Release the Lead Wire from stoppers.

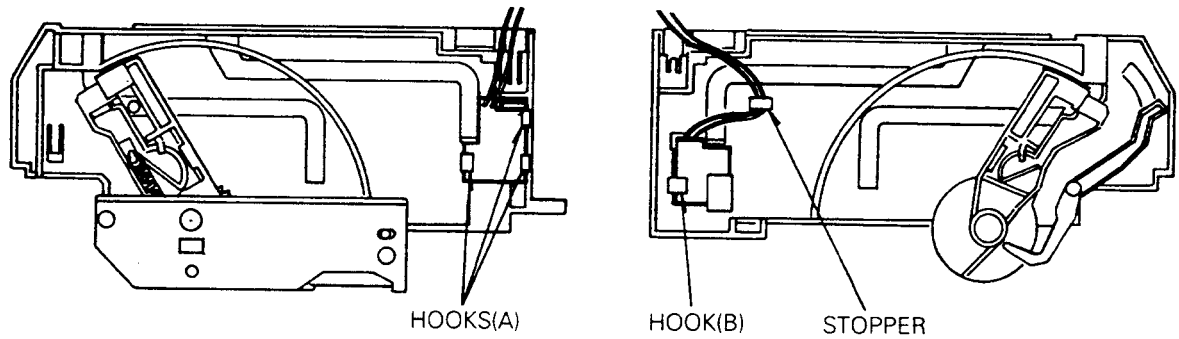

Fig. A-2 PCB Assembly

3. Top Plate(Fig. A-3)

1) Remove two screws(A).
2) Push the upper part of Top plate Ground and then lift up the Top Plate in the direction of arrow(B).

*** NOTE**

1) When reassembling, be certain that the tabs(C) of Top Plate is in both Bracket(L),(R).

① Then align the guide holes(D) of Top Plate with Bosses of side Bracket(L),(R).

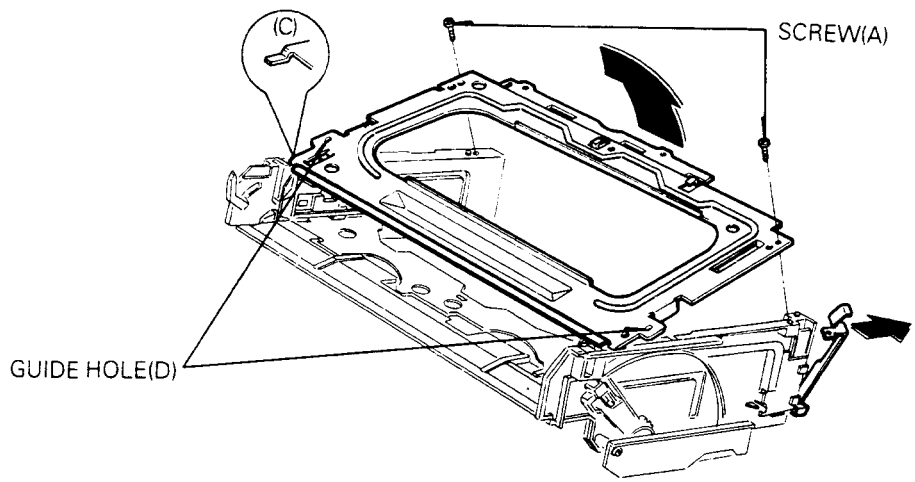

Fig. A-3 Top Plate

4. Carrier Bracket Assembly

4-1. Carrier Bracket Assembly(Fig. A-4-1)

1) Remove the Carrier Bracket Assembly by moving it in the direction of arrow(C).

*** NOTE**

1) When reassembling, be sure that parts(A) of Carrier Bracket Assembly are seated in parts(B) of Bracket(L),(R).

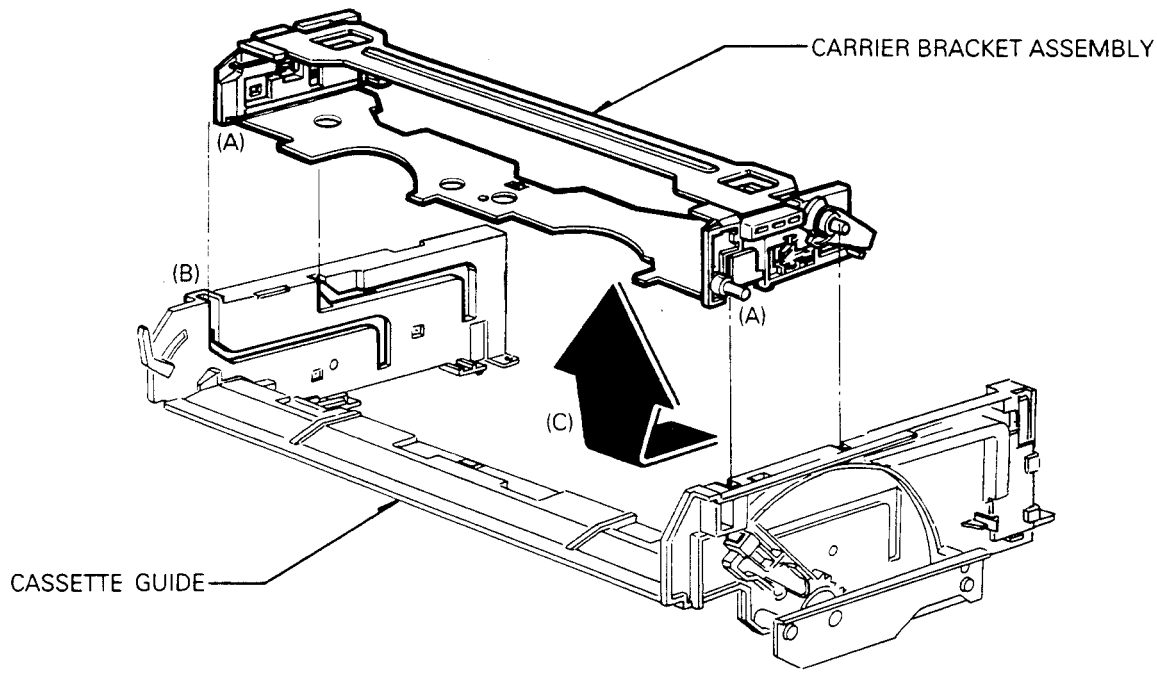

Fig. A-4-1 Carrier Bracket Assembly

4-2. Cassette Opener(Fig. A-4-2)

1) Release the spring O.C from the Hook(A) and then release it from Hook(C) of cassette opener.
2) Remove the cassette opener by releasing the Hook(B) from the Holder(R).

4-3. Rid Opener(Fig. A-4-2)

1) Remove the rid opener by pushing it outward.

*** NOTE**

1) When reassembling, seat the upper part of the rid opener in the grooved of Holder(R) and push it inward.

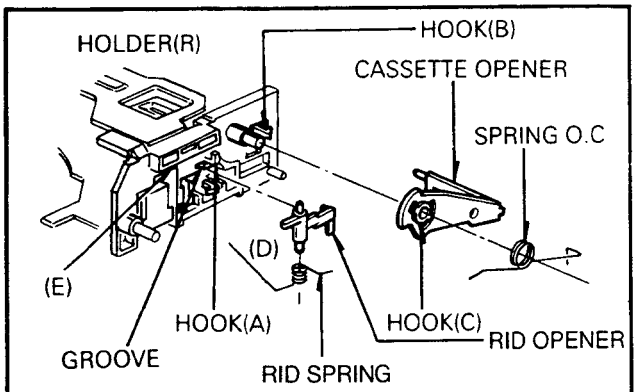

Fig. A-4-2 Cassette Door Opener/Rid Opener

4-4. Detect Lever and Detect Spring

1) Remove the spring detect.
2) Lower the side(A) of Detect Lever and then remove the Detect Lever by pushing it outward.

*** NOTE**

1) When reassembling, make sure that the part(C) of Detect Lever set in the part(B) of Holder(R).

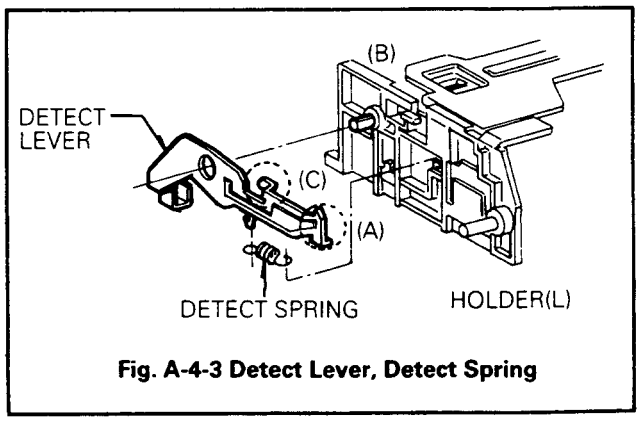

Fig. A-4-3 Detect Lever, Detect Spring

4-5. Support Bracket Assembly(Fig. A-4-4)

1) Take the Support Bracket out by releasing hooks(A),(B).

*** NOTE**

1) When disassembling and reassembling, be careful because heavy force can damage the hooks.

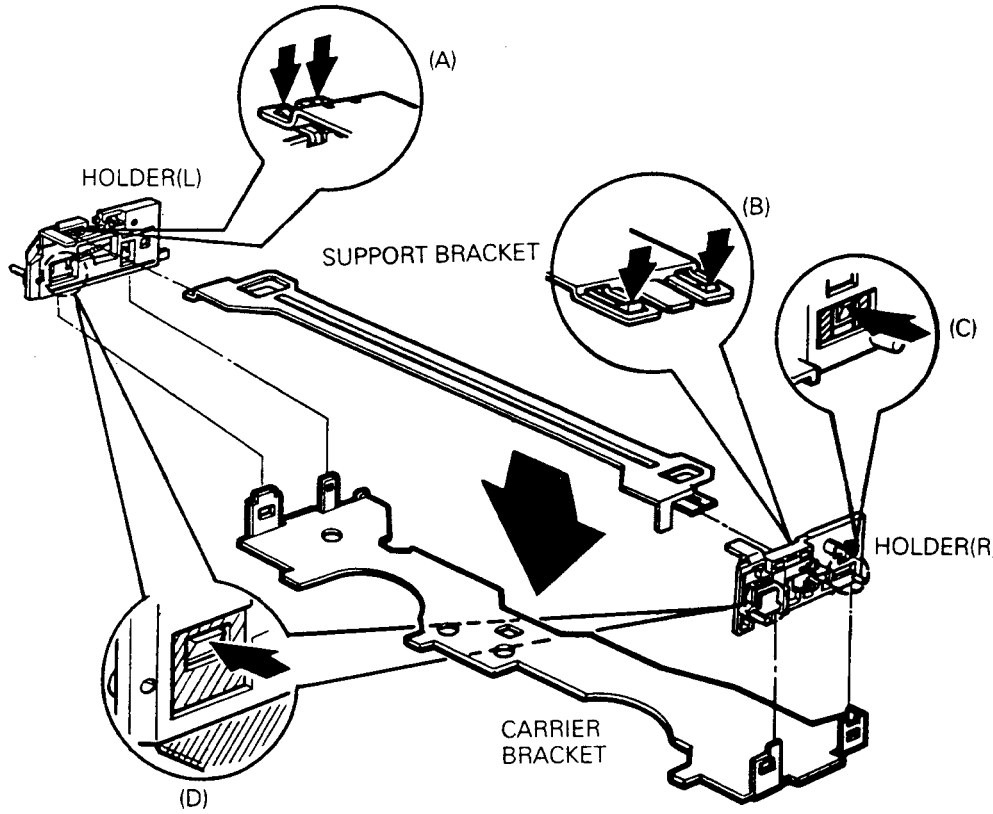

Fig. A-4-4 Support Bracket/Carrier Bracket

4-6. Carrier Bracket Assembly(Fig. A-4-4)

1) Remove the Carrier Bracket by releasing hooks(C),(D).

5. Cassette Guide(Fig. A-5)

1) Remove the Switch Spring with the Front Loading Mechanism Assembly turned over.
2) Push two hooks(B) outward.
3) Remove the Cassette Guide by pushing two hooks(A). outward(if one is removed, the other will be easy to remove)

*** NOTE**

1) When reassembling

① Seat projections(E) of Cassette Guide in holes of Bracket Assembly(L),(R) and then engage the Hook(A).

② After finishing previous step, fix the Cassette Guide to the Bracket Assembly(L),(R) by pushing two hooks(B) inward.

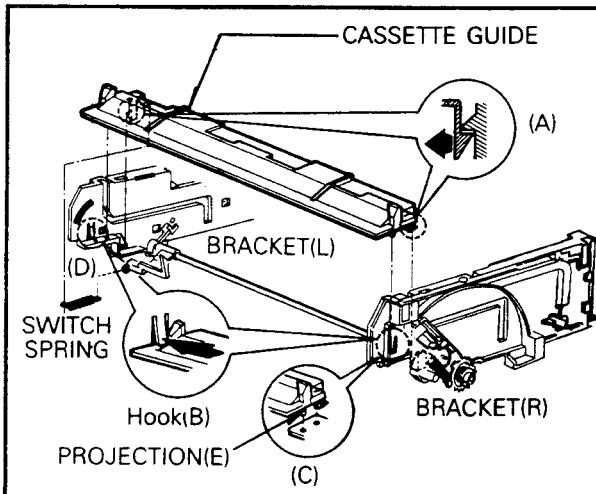

Fig. A-5 Cassette Guide

6. Bracket Assembly Side (Fig. A-6-1)

1) Remove two screws(A) and then remove the Side Bracket Assembly and the Rack Gear N.D.

*** NOTE**

1) When reassembling

① Turn the Drive Gear Assembly in the direction of arrow (C).

② Reassemble the Rack Gear N.D. to the Side Bracket Assembly, as shown in Fig. A-6-2, and then reassemble it to the Bracket Assembly(L). This time the Assembling Figure should be the same as(B) at the rectangular hole of Bracket Side.

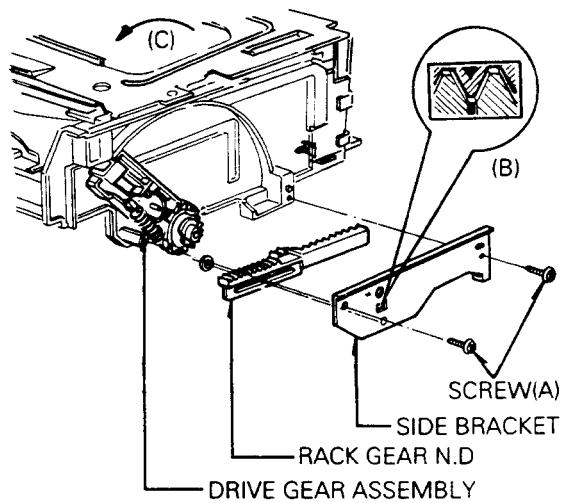

Fig. A-6-1 Side Bracket Assembly

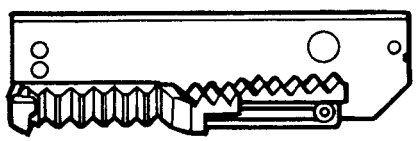

Fig. A-6-2

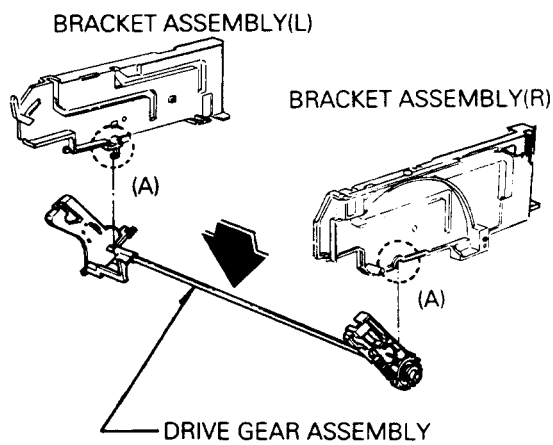

Fig. A-7 Bracket Assembly(L),(R)

7. Bracket Assembly(L),(R)(Fig. A-7)

1) Seperate the Bracket Assembly(L),(R) from the Gear Assembly Drive.

*** NOTE**

1) When reassembling, seat the shaft in the part(A) of Bracket Assembly(L),(R).

8. Door Opener(Fig. A-8)

1) Remove the Door Opener by pushing Hook(A) outward.

*** NOTE**

1) When reassembling, seat the part(B) of Door Opener in the hole( ) of Bracket(L).

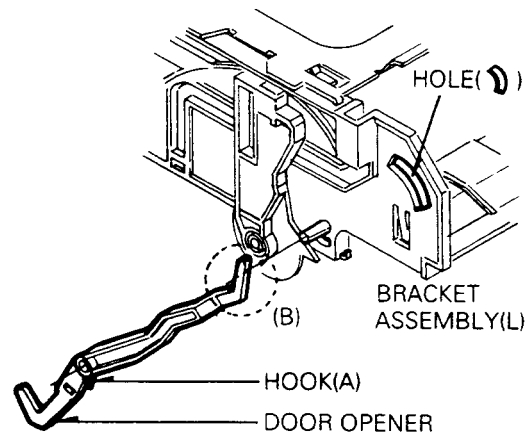

Fig. A-8 Door Opener

9. Drive Gear Assembly

9-1. Drive Gear Assembly(Fig. A-9-1)

1) Remove the Drive Gear Assembly from the Bracket Assembly(L),(R).

9-2. Cushion Spring(Fig. A-9-1)

1) Remove the cushion spring from the Gear R .

9-3. Cap-D(Fig. A-9-1)

1) Remove the Cap-D by lifting it up.

9-4. Spring C.C(Fig. A-9-1)

1) Remove the Spring C.C from the Gear R.

9-5. Gear C(Fig. A-9-1)

1) Remove the Gear C by lifting up when the projection of Gear C is aligned with the hole of Gear R while rotating the Gear C in the counterclockwise direction.

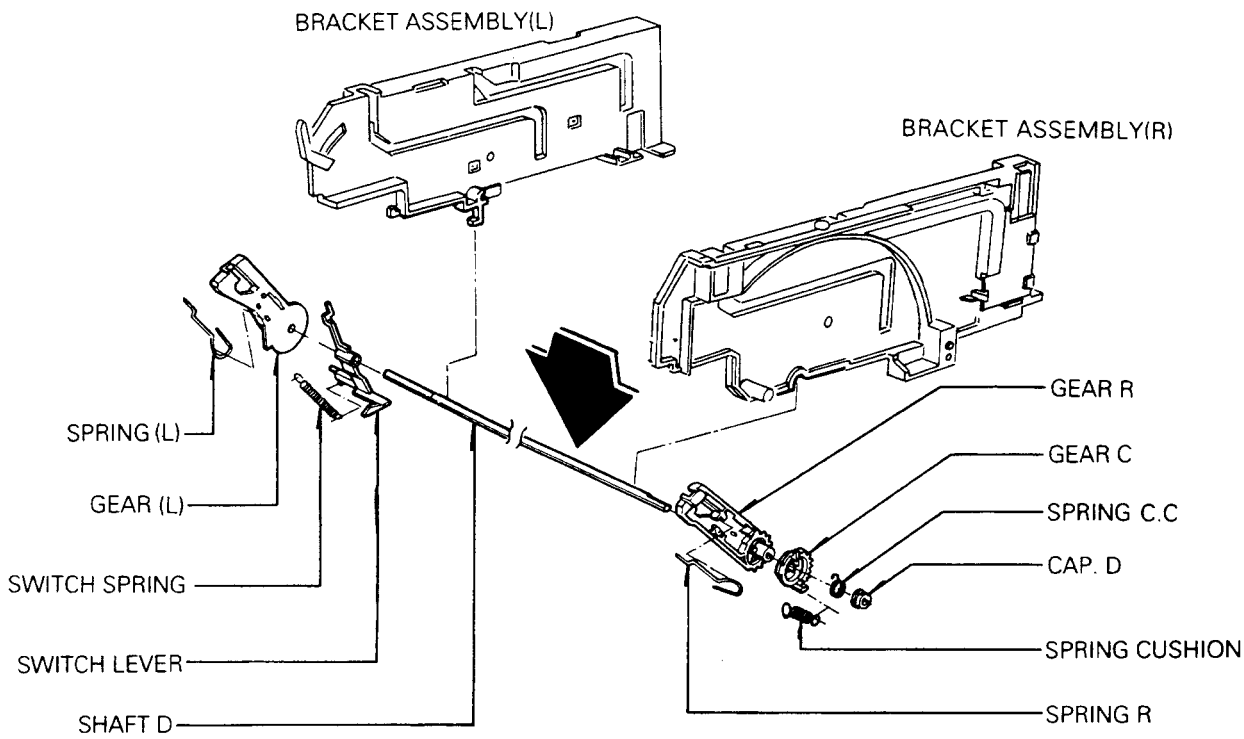

Fig. A-9-1 Drive Gear Assembly

*** NOTE**

1) When reassembling, seat the projections of Gear R in the holes of Gear C when the projection of Gear R is aligned with the hole of Gear C, and then keep the Gear C turned in the clockwise direction.

9-6. Gear R(Fig. A-9-1)

1) Lift up the Gear R from the Shaft.

9-7. Spring R(Fig. A-9-2)

1) Remove the Spring R by releasing Hooks.

*** NOTE**

1) When reassembling, be certain Spring R in the part(A) of Gear R.

9-8. Gear L.(Fig. A-9-1)

1) Remove the Gear L from the shaft.

9-9. Spring L (Fig. A-9-2)

1) Remove the Spring L by releasing Hooks from the Gear L.

*** NOTE:** (Refer to the Spring R Section)

9-10. Switch Lever(Fig. A-9-1)

1) Remove the Switch Lever from the shaft.

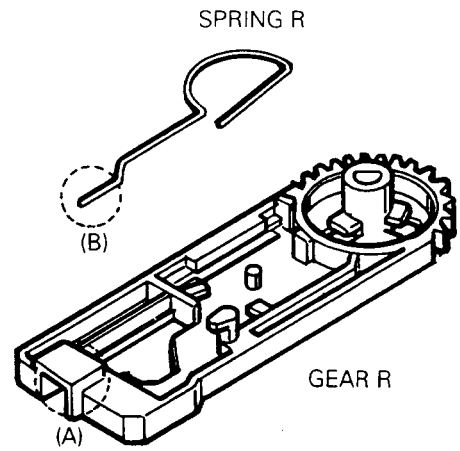

Fig. A-9-2 Spring R

DECK MECHANISM DISASSEMBLY

• Deck Mechanism Parts Location

Top Side

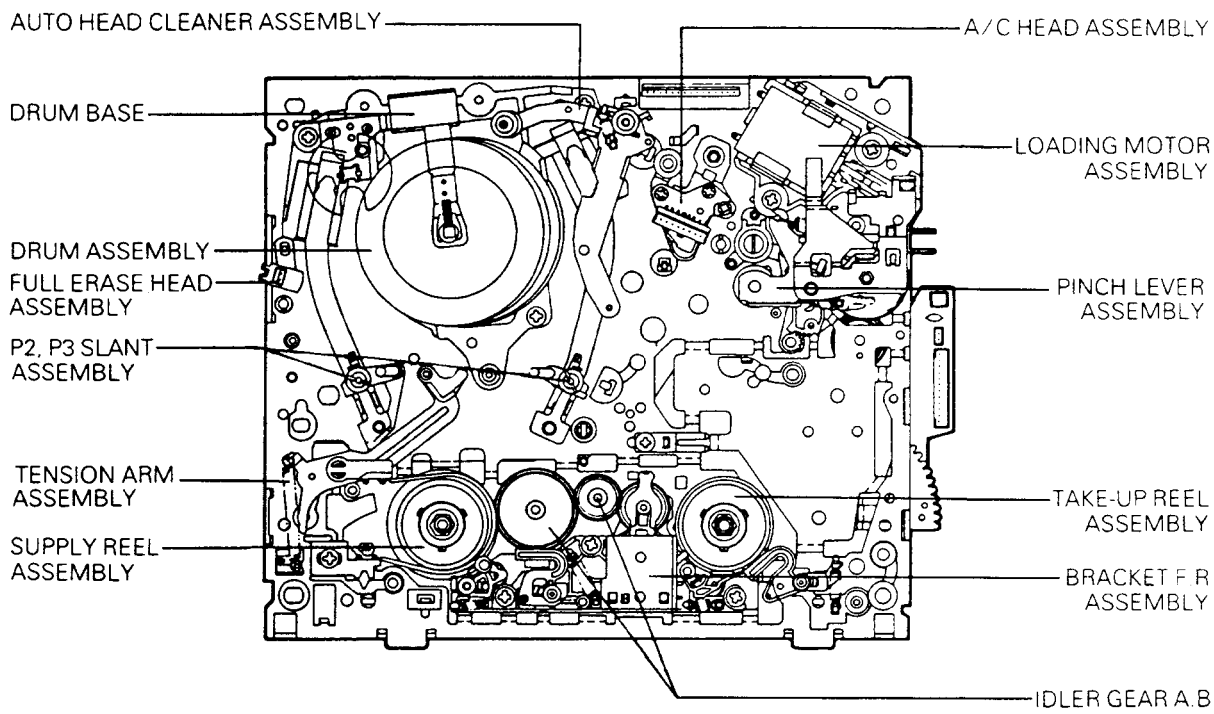

Bottom Side

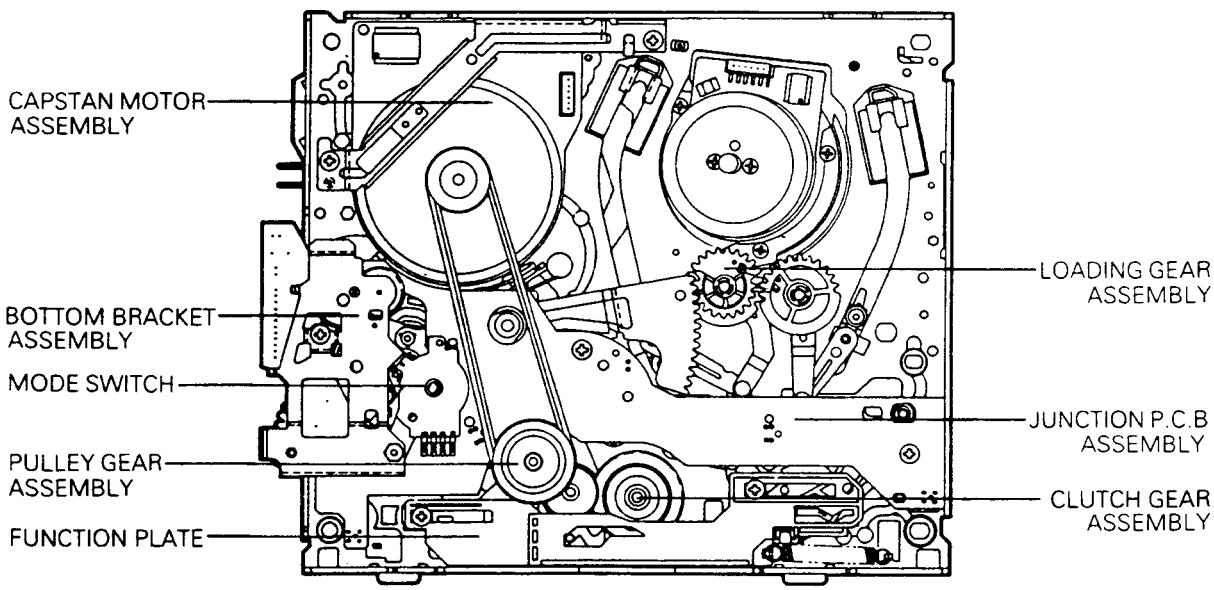

1. Auto Head Cleaner Assembly (Fig. B-1) (Optional Item)

1) Remove the Cleaner Arm Assembly (Auto Head Cleaner Assembly) by pushing the Locking Tab.(B) outward.
2) Remove the Cleaner Upper Spring and then remove the Cleaner Upper Arm Sub Assembly.
3) Remove the Cleaner Spring.

*** NOTE**

1) When reassembling, do not touch the Video Head Tip with fingers or tools.

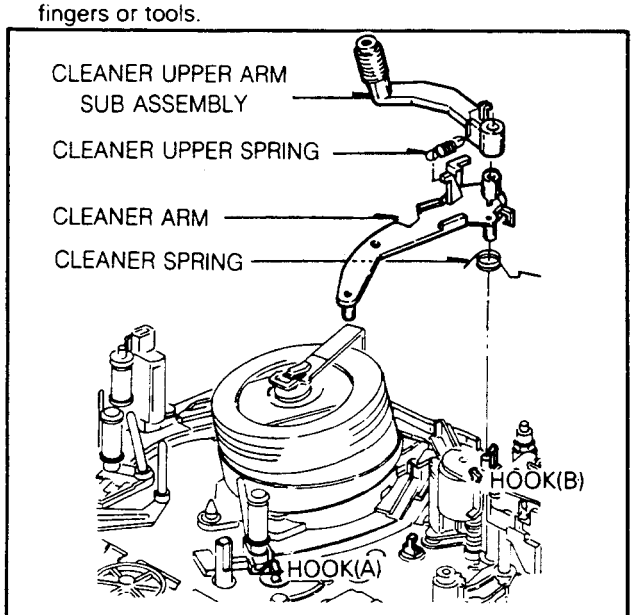

Fig. B-1 Auto Head Cleaner Assembly

2. Drum Assembly and Drum Base(Fig. B-2)

1) Remove the Auto Head Cleaner Assembly. (Option)
2) Unplug the connector with the Deck Mechanism Assembly turned over.
3) Loosen the screw(A) and then lift up the Drum Brush.
4) Remove two screws(B) and then lift up the Drum Assembly and Drum Base from the Deck Mechanism Assembly.
5) Separate the Drum Assembly from the Drum Base by Loosening three screws(C) on the back of Drum Base.

*** NOTE**

1) When disassembling and reassembling

① Do not touch the Video Head tip with fingers or tools. (Give special attention to disassembling and reassembling of Auto Head Cleaner Assembly)

② After reinstalling the Drum Brush, the Drum Brush should be aligned with the center of vertical axis of Drum Assembly.

③ After completing the reassembly, adjust the transportation system and the Servo P.G.

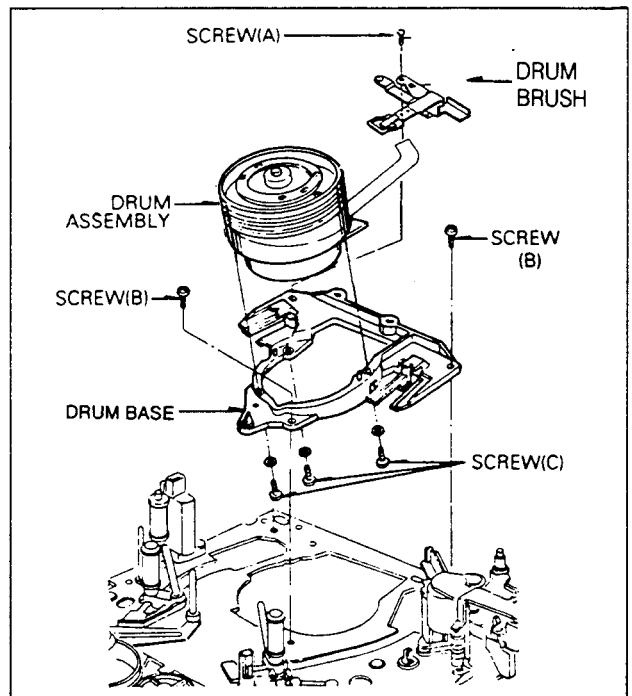

Fig. B-2 Drum Assembly/Drum Base

3. Drum Assembly

3-1. Drum Sub and Motor Assembly (Fig. B-3-1) : New Type (No two screws and P.C.B on the Drum)

1) Remove the Drum Base from the Deck Mechanism Assembly.
2) Separate the Drum Assembly from the Drum Base.
3) Remove two screws(A) and then remove the rotor.
4) Remove three screws(B) and then remove the stator.

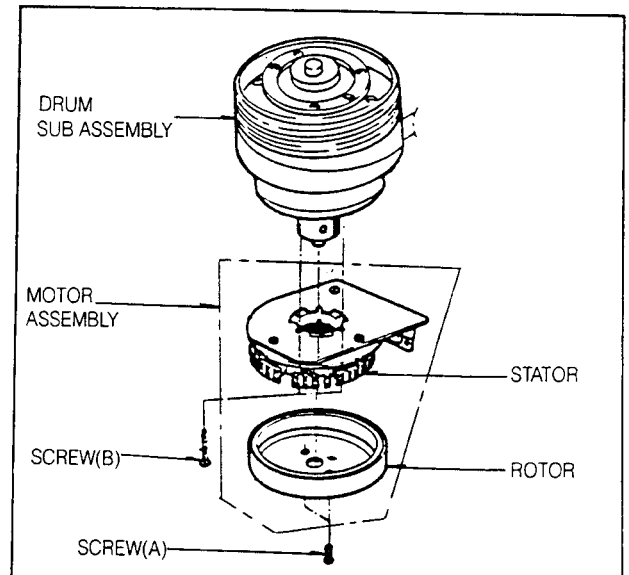

Fig. B-3-1 Drum Sub and Motor Assembly

*** NOTE**

1) When disassembling and reassembling

① Do not touch the Video Head Tip with fingers or tools.

3-2. Upper and Lower Drum Assembly (Fig. B-3-2)
: Old Type (There are two screws and P.C.B on the Drum)

1) Remove the Drum Assembly and Drum Base from the Deck Mechanism Assembly.
2) Separate the Drum Assembly from the Drum Base.
3) Remove two screws(A).
4) Remove the P.C.B.
5) Separate the upper Drum Assembly from the Lower Drum Assembly.

* **NOTE**

1) When disassembling and reassembling
① Do not touch the Video Head Tip with fingers or tools.
② Make sure that the color(white) marked on the P.C.B of the upper Drum should coincide with the color(Green) marked on the Flange Assembly.

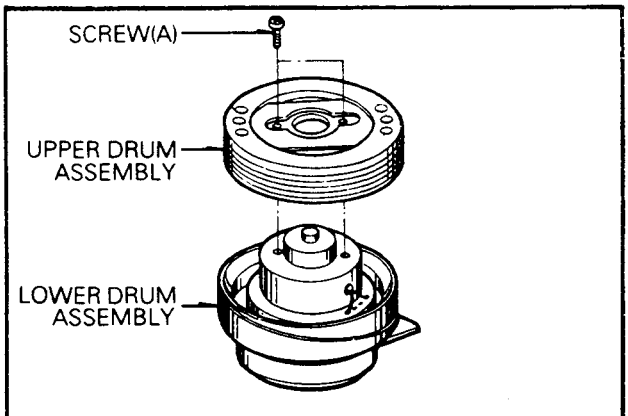

Fig. B-3-2 Upper/Lower Drum Assembly

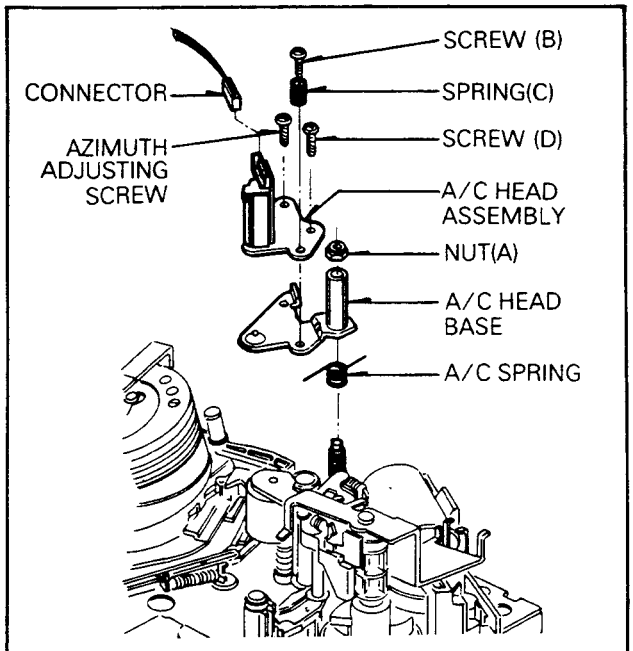

Fig. B-4 A/C Head Assembly

4. A/C(Audio/Control) Head Assembly (Fig.B-4)

1) Unplug the connector
2) Remove the Nut(A), and then lift up the A/C Head Assembly.
3) Remove the Azimuth Adjusting Screw.
4) Remove two screws(B),(D) and then separate the A/C Head Assembly from the Base A/C Head Assembly.

* **NOTE**

1) When disassembling
① First of all, release the spring A/C.
② Do not touch the A/C Head Tip with fingers or tools.
③ After reinstalling the Audio Control Head Assembly, adjust the Tilt, Azimuth and Height of A/C Head.

5. Pinch Lever Assembly(Fig. B-5)

1) Remove one Nut, and then remove the Dew Bracket.
2) Lift up Pinch Lever Assembly.
3) Remove the Pinch Spring, and remove the Pinch Lever.
4) Remove the Stopper Spring and remove the Pinch Stopper by lifting it up when the Hook of Pinch Stopper is aligned with the hole of Pinch Arm while rotating the Pinch Stopper in the counterclockwise direction.
5) Remove the Pinch Cap, and then remove the Pinch Roller Assembly.

* **NOTE**

1) When disassembling and reassembling
① Be careful not to get any foreign substance on the Roller.
② When disassembling the Pinch Cap, be careful not to damage the Pinch Arm.

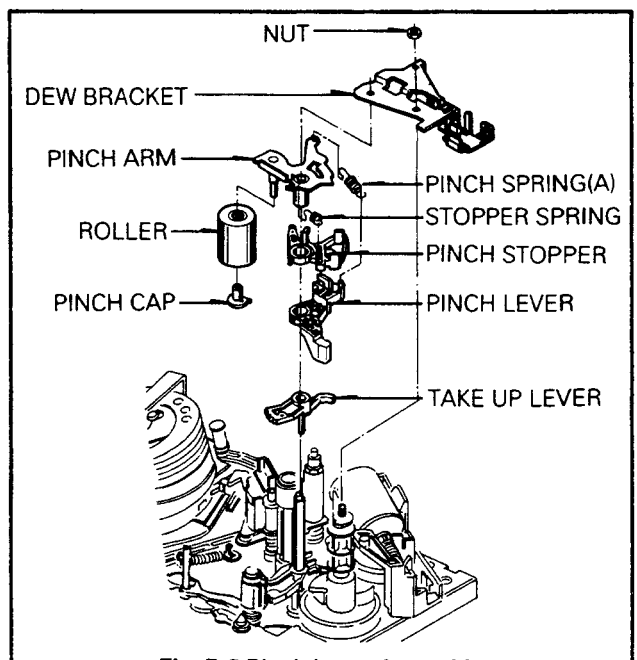

Fig. B-5 Pinch Lever Assembly

6. Loading Motor Assembly(Fig. B-6-1, B-6-2)

1) Remove the Dew Bracket.
2) Unplug the connector from the Junction P.C.B Assembly
3) Remove two screws(A).
4) Remove the worm wheel by pushing it down.
5) Remove the Loading Motor Assembly by pushing(C) and (D) outward.
6) Remove the worm Gear Assembly from the Loading Motor Assembly by pushing it.

*** NOTE**

1) When reassembling

① Make sure that the worm assembly is seated in the axis of Loading Motor.

② Two grooves(G) of Loading Motor should be turned up and two projections(F) of Bracket Assembly should be seated in each at the two holes(E)(Fig. B-6-1).

③ Take notice of the polarity of the Loading Motor.

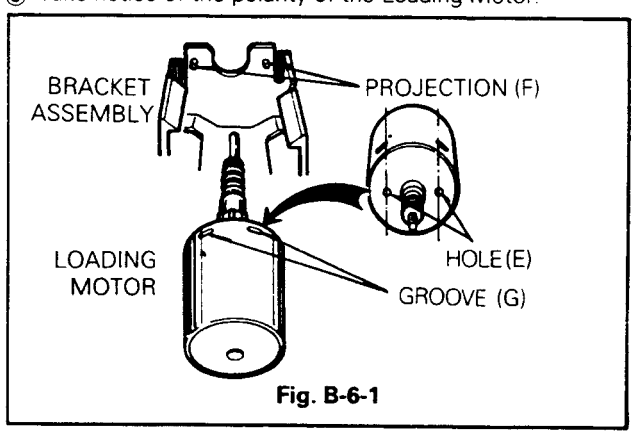

Fig. B-6-1

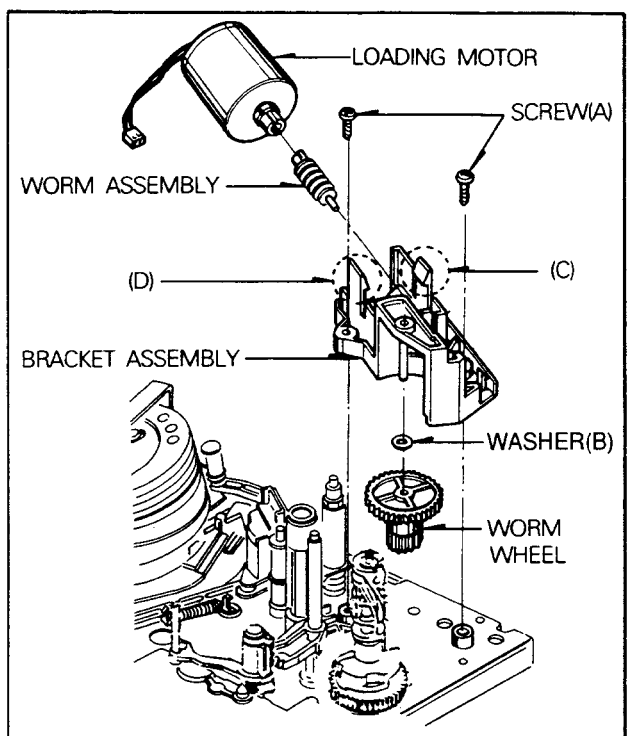

Fig. B-6-2 Loading Motor Assembly

7. Take Up Lever(Fig. B-7)

1) Remove the Loading Motor Assembly.
2) Remove the Dew Bracket(Fig. B-5).
3) Remove the Pinch Lever Assembly(Fig. B-5).
4) Keep the Pinch Gear turned in the clockwise direction (180°).
5) Remove the Take-Up Lever by pushing the hook(A) outward.

*** NOTE**

1) When disassembling and reassembling

① When disassembling the Take-Up Lever, be careful not to break the Hook(A).

② When reassemble the Take-Up Lever,align the appendant Gear of Lever Take-Up with the appendant Gear of Take-up Arm

③ Reassemble the Take-Up Lever completely by hooking (A).

④ Be sure to replace together Take-Up Lever and Pinch Gear.

⑤ Be sure to assemble Pinch Lever Assembly before operating.

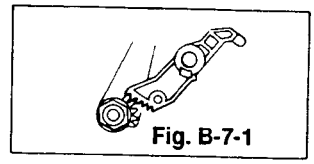

Fig. B-7-1

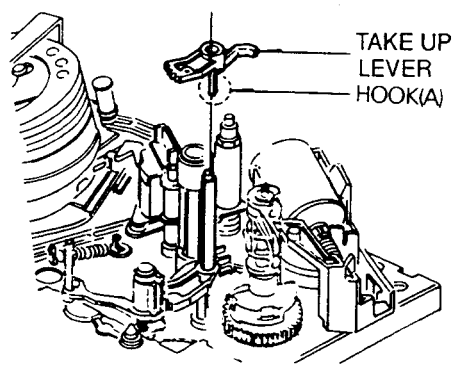

Fig. B-7. Take-Up Lever

8. Take Up Arm Assembly(Fig. B-8)

1) Remove the Loading Motor Assembly.
2) Remove the Dew Bracket, Pinch Gear, and the Take-Up Lever.
3) Remove one Washer(A).
4) Remove the Take-Up Arm Assembly by lifting it up.
5) Remove the spring(B).

*** NOTE**

1) When reassembling

① Align the Gear of Take-Up Arm with the Gear of Take-Up Lever(Fig. B-7-1).

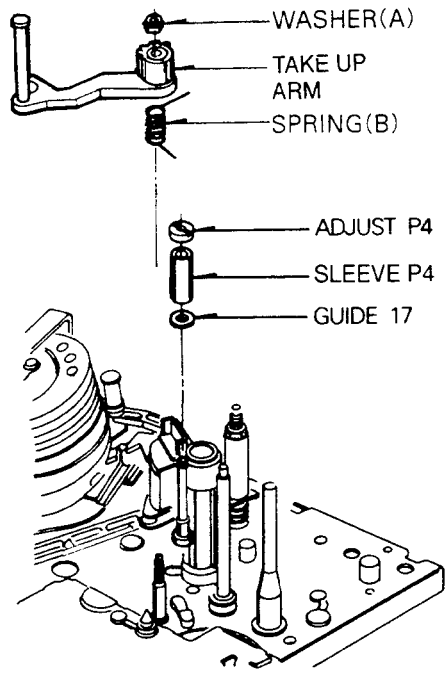

Fig. B-8 Take-Up Arm Assembly/P4

9. P4 Assembly(Fig. B-8)

1) Remove the Adjust P4.
2) Remove the Sleeve P4.
3) Remove the Guide 17.

10. Pinch Gear(Fig. B-10-1, B-10-2)

1) Remove the Loading Motor Assembly.
2) Remove one Nut(A) and then remove the Dew Bracket (Fig. B-5).
3) Remove the Pinch Lever Assembly by lifting it up(Fig. B-5)
4) Keep the Pinch Gear turned in the clockwise direction (180°).
5) Remove the Take-Up Lever by pushing the hook(A) outward(Fig. B-7).
6) Keep the Pinch Gear turned in the counterclockwise direction (180°).
7) Remove the Pinch Gear Assembly.

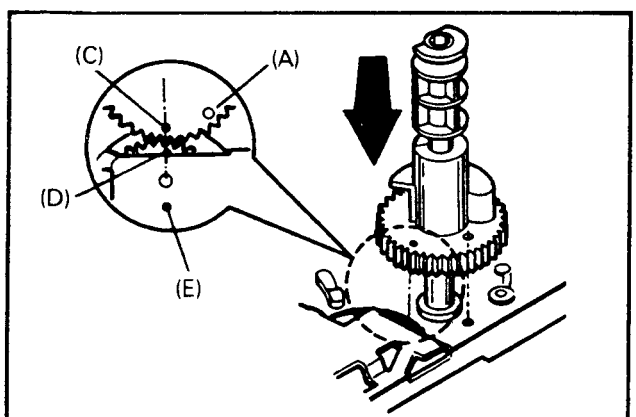

Fig. B-10-2 Pinch Gear

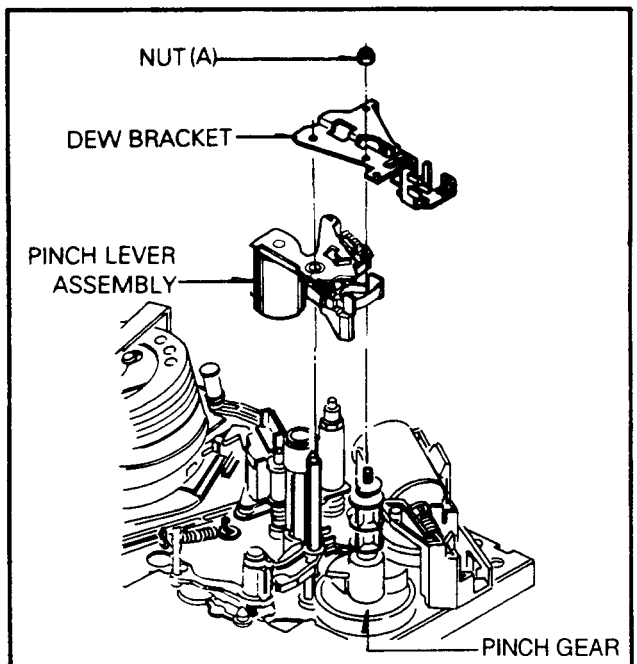

Fig. B-10-1 Pinch Gear Assembly

• NOTE

1) When reassembling, align the hole(A) of Pinch Gear with the hole of chassis, and the hole(C) of Pinch Gear with the groove(D) of the P.C.Gear. Hole(E) of chassis should be aligned with the hole of P.C.Gear.
2) Be sure to replace together Take-Up Lever and Pinch Gear.
3) Be sure to assemble Pinch Lever Assembly before operating.

11. FE(Full Erase) Head Assembly(Fig. B-11) (Optional Item)

1) Unplug the connector.
2) Remove one screw(A), and then remove the FE Head.

• NOTE

1) When disassembling and reassembling

① Do not touch the Video Head Tip with fingers or tools.

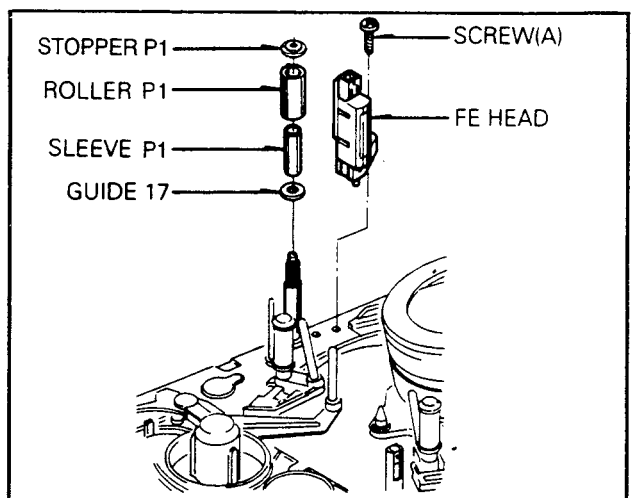

Fig. B-11 FE Head/P1

12. P1 Assembly(Fig. B-11)

1) Remove the Stopper P1.
2) Remove the Roller P1 .
3) Remove the Sleeve P1.
4) Remove the Guide 17.

13. Tension Arm Assembly(Fig. B-13)

1) Remove one screw(C).
2) Remove the Tension Spring.
3) Remove the Tension Arm Assembly by pushing hooks outward with the Deck Mechanism Assembly turned over.
4) Remove the Tension Band Assembly from the Tension Arm by pushing Hooks of Holder(A).

• NOTE

1) When disasembling and reassembling, give special attention to the disassembling and reassembling of Tension Arm Assembly, because the Tension Band is interposed between the Supply Reel and the Soft Brake.

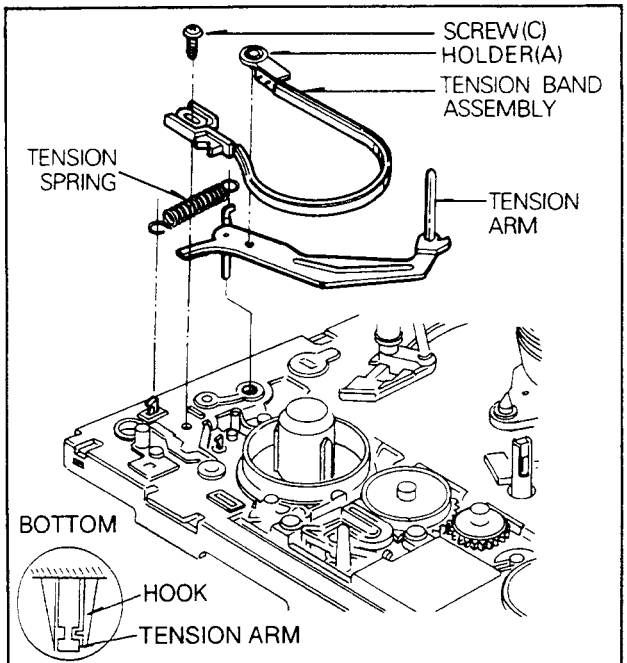

Fig. B-13 Tension Arm Assembly

14. Supply Soft/Supply Main/Take-Up Soft /Take-Up Main Brake Assembly

1) Supply Soft Brake(SSB)
   ① Remove the SSB Spring.
   ② Remove the SSB.
2) Supply Main Brake(SMB)
   ① Remove the SMB Spring.
   ② Remove the SMB.
3) Take Up Soft Brake(TSB)
   ① Remove the TSB Spring.
   ② Remove the TSB.
4) Take-Up Main Brake(TMB)
   ① Remove the TMB Spring.
   ② Remove the TMB.

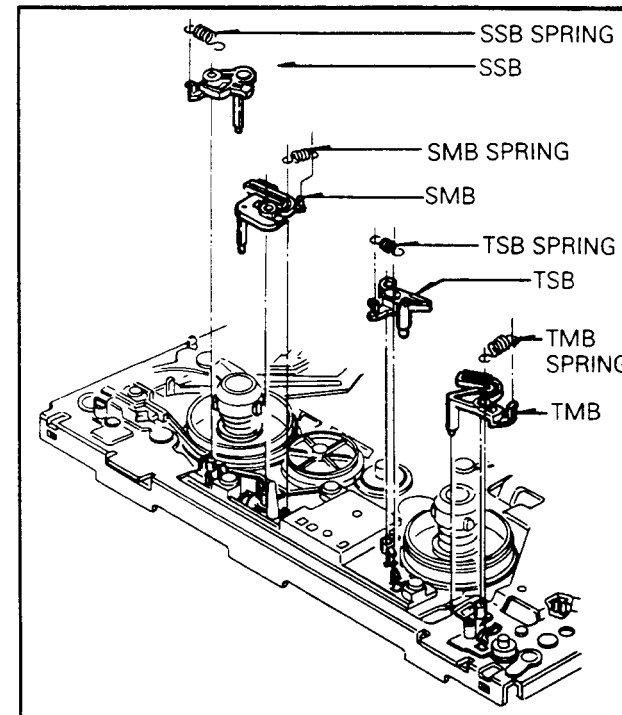

Fig. B-14 SMB/SSB/TMB/TSB

15. Bracket F/R(FF/Rewind) Assembly (Fig. B-15)

1) Remove the TMB.
2) Remove the Washer(A), and then remove the Gear F.R.
3) Remove three screws, and then remove Bracket F/R Assembly from the Deck Mechanism Assembly.
4) Remove the Washer(B), and spring Up/D, and then remove the Gear Up/D.
5) Remove the shaft(C), and then remove the Arm F.R, Lever F.R and Spring F.R.

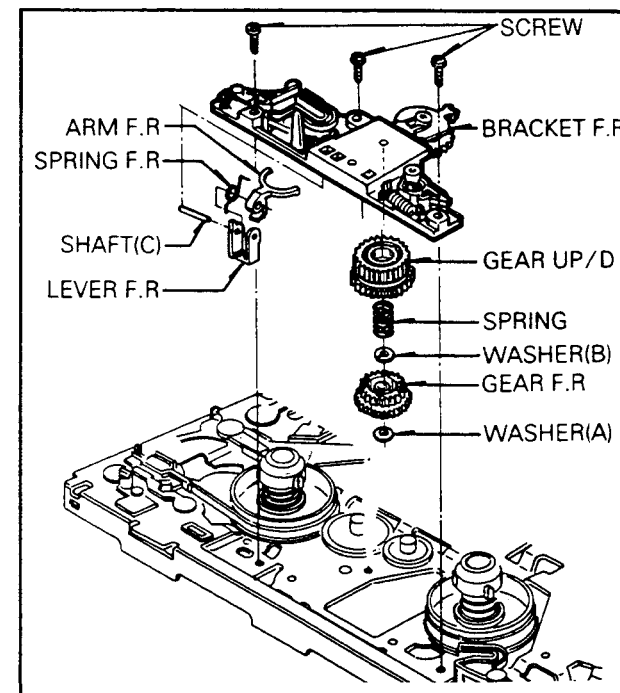

Fig. B-15 Bracket F.R Assembly

16. Supply Reel Assembly(Fig. B-16)

1) Remove the Tension Band Assembly.
2) Remove the Bracket F/R.
3) Lift up the Supply Reel Assembly from the Deck Mechanism Assembly.

17. Take Up Reel Assembly(Fig. B-16)

1) Remove the TMB(Fig. B-14)
2) Lift up the Take-up Reel Assembly from the Deck Mechanism Assembly.

*** NOTE**

1) When reassembling
① Make sure that the Supply and Take Up Reel are not exchanged.
② After reinstalling the Supply Reel Assembly, Adjust the Tension.

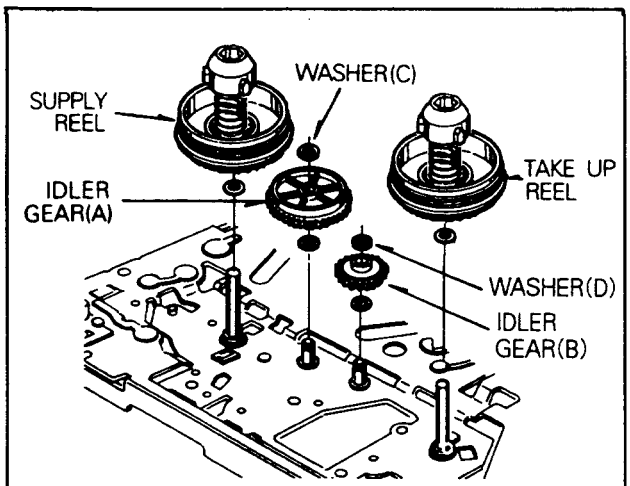

Fig. B-16 Supply Reel Assembly/Take-Up Reel Assembly

18. Idler Gear(A), (B)(Fig. B-16)

1) After removing the Supply Reel and supply Main Brake Assembly, remove the washer(C) and then remove the Idler Gear(A).
2) Remove the Washer(D) and remove the Idler Gear(B).

19. Pulley Gear Assembly(Fig. B-19)

1) Turn over the Deck Mechanism Assembly.
2) Remove the Capstan Belt.
3) Remove the Washer(A) and lift up the Pulley Gear.

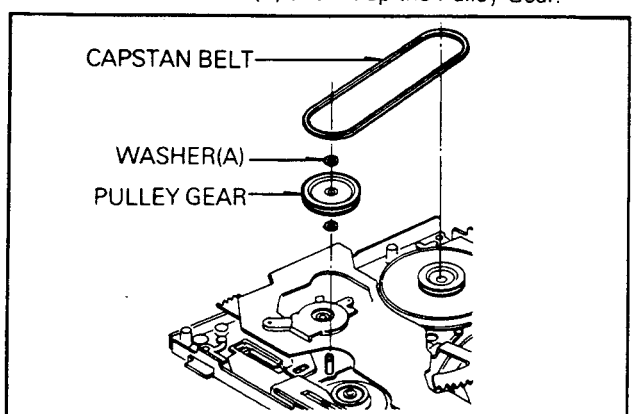

Fig. B-19 Pulley Gear

20. Bracket Bottom Assembly(Fig. B-20)

1) Remove one screw(A).
2) Remove one Hexagonal Nut, and then lift up the Bracket Bottom Assembly.
3) Remove one Washer(C), and lift up the Ratchet Gear 1.
4) Remove the washer(D), and then remove Ratchet Gear 3 from the Bracket Bottom.

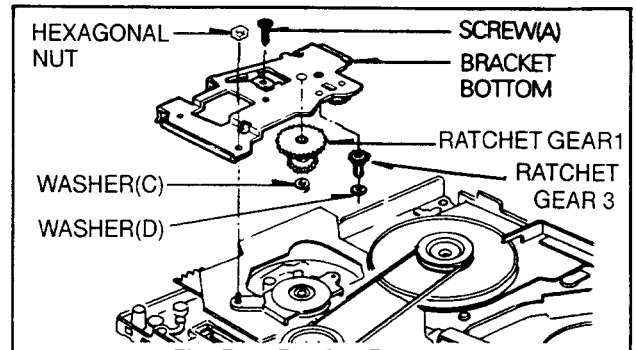

Fig. B-20 Bracket Bottom

21. Junction PCB(Printed Circuit Board) Assembly(Fig. B-21-1)

1) Remove the Bracket Bottom Assembly.
2) Remove two screws(A), (B) and then remove the Junction P.C.B Assembly.
3) Remove the Mode Switch from the Junction P.C.B Assembly.
4) Remove the Reel Sensor, Sensor LEDS and each holder from the Junction P.C.B(Fig. B-21-2).

*** NOTE**

1) When reassembling the Mode Switch, the groove(V) and (U) of Mode Switch should be at their original place in the Eject Mode.

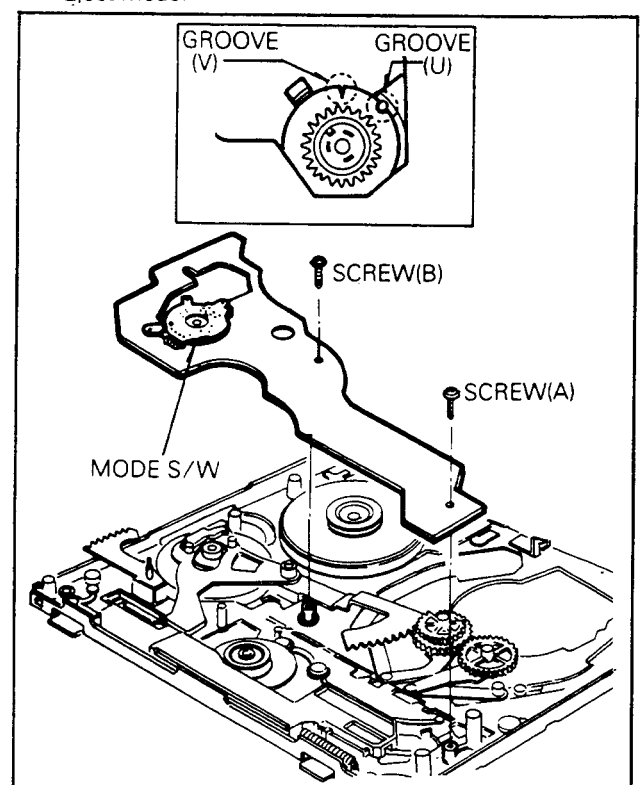

Fig. B-21-1 Junction PCB Assembly

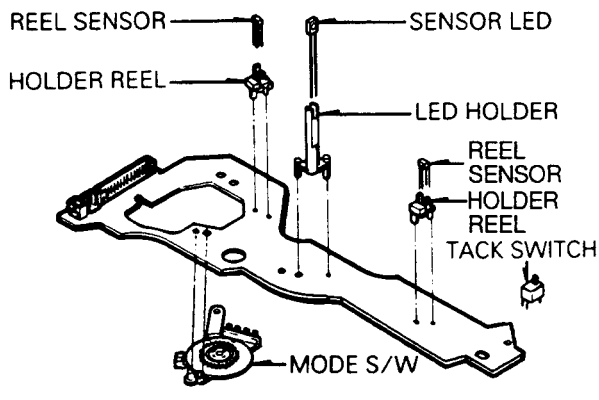

Fig. B-21-2 Mode S/W/Reel Sensor/Sensor Led

22. Capstan Motor and Brake Assembly (Fig. B-22-1)

1) Remove the Junction P.C.B Assembly
2) Hook the end of Capstan Brake Spring to the projection of Capstan Brake and then remove the Capstan Brake Assembly by lifting it up(Fig. B-22-2).
3) Remove two Screws(A), and then remove the Bracket C-Guide.
4) Remove the Connector.
5) Remove three screws(B), and then remove the Capstan Motor Assembly from the Deck Mechanism Assembly.

*** NOTE**

1) When disassembling and reassembling, hook end of the spring on the projection of Cap-Brake and remove it by lifting it up. Reassemble it in the opposite manner.

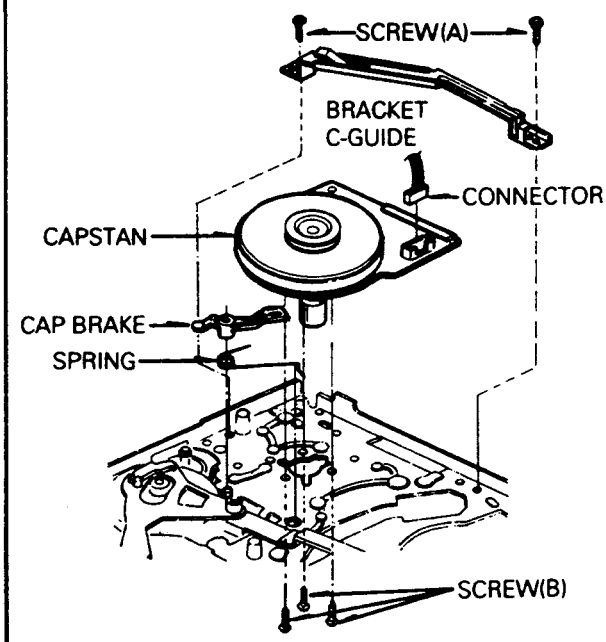

Fig. B-22-1 Capstan Motor Assembly

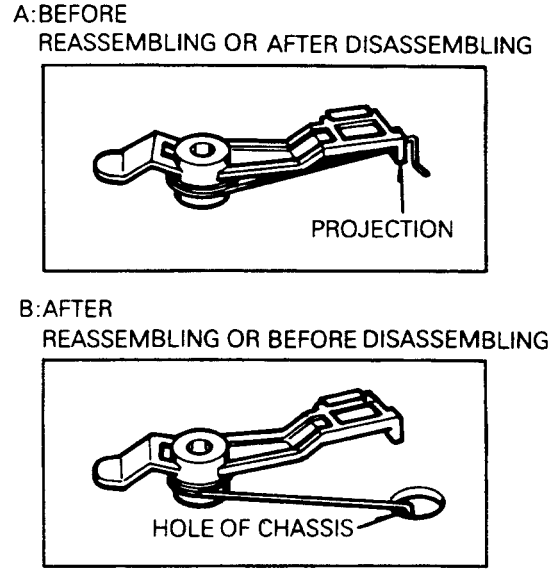

Fig. B-22-2 CAP Brake Assembly

23. Function Plate(Fig. B-23)

1) Remove two screws(B) in Eject Mode.
2) Remove the Function Plate Spring.
3) Push the Function Plate in the direction of arrow(A) and then lift it up.

*** NOTE**

1) When reassembling, the groove of Lower part of Function Plate should be aligned with the shaft of Tension Lever Assembly(Fig. B-29).

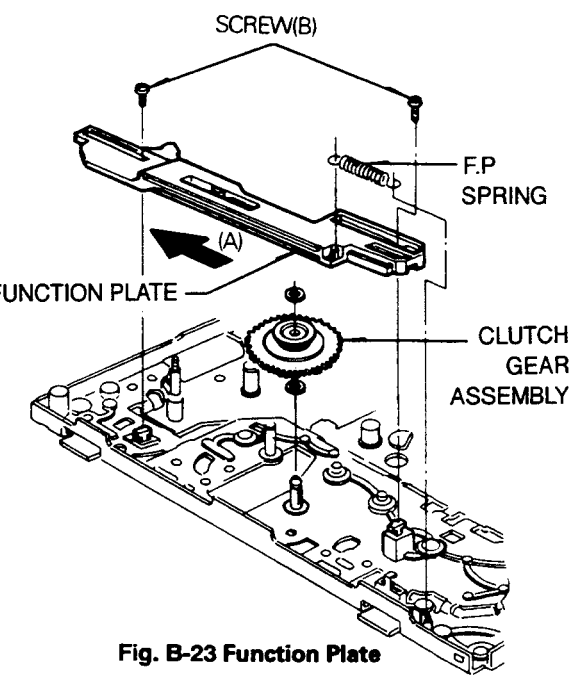

Fig. B-23 Function Plate

24. Ratchet Lever Assembly(Fig. B-24)

1) Remove the Function Plate.
2) Remove the Junction P.C.B Assembly.
3) Remove the Washer(A) and then remove the Ratchet Lever Assembly.
4) Remove the Ratchet Spring.
5) Remove the Ratchet Lever from the Ratchet 17 by lifting it up when the hook of it is aligned with the hole of Ratchet 17 while rotating it counterclockwise direction.
6) Remove the Washer(B), and turn over the Ratchet 17 and then remove the F-Lever Pin, Spring F-Lever.

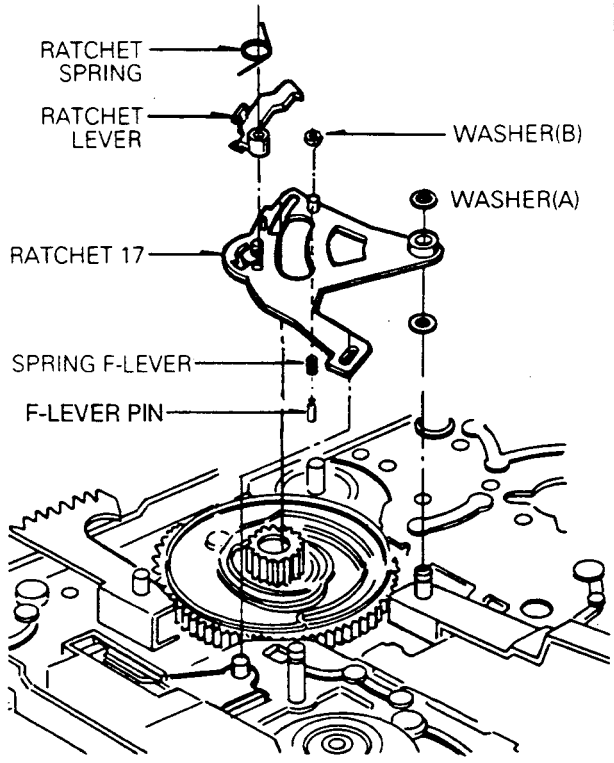

Fig. B-24 Ratchet Lever Assembly

25. Cam Gear/Rack Gear T/Rack Gear FL(Fig. B-25-2)

1) Remove the washer(A) and remove the Ratchet Lever Assembly.(Fig. B-25-1).
2) Remove the washer(B), and then remove the Cam Gear (Fig. B-25-2).
3) Remove the Rack Gear F.L.(Fig B-25-3).
4) Remove the Washer(D).(Fig. B-25-3).
5) Remove the Rack Gear T.(Fig. B-25-3).

*** NOTE**

1) When reassembling

① Align the Projection of Rack Gear T with the hole of Loading Gear.
② Drive the Rack Gear F.L in the direction of arrow(D).
③ Hole of Cam should be aligned with the hole of chassis, and the groove(■) of Cam Gear should be aligned with the hole of PC Gear (Fig. B-26).

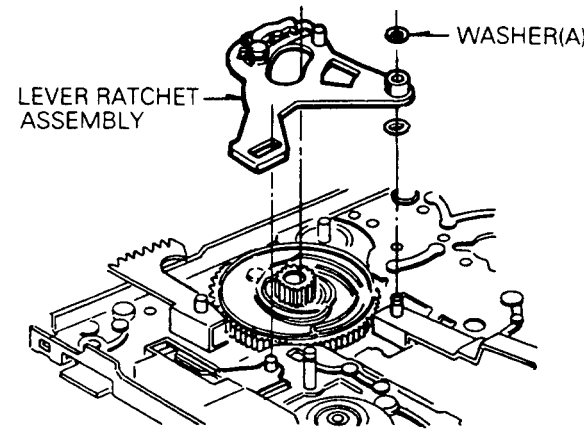

Fig. B-25-1 Lever Ratchet Assembly

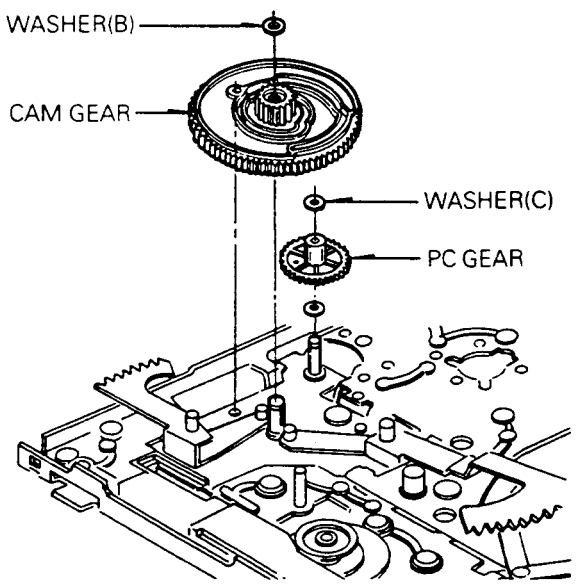

Fig. B-25-2 CAM/PC Gear

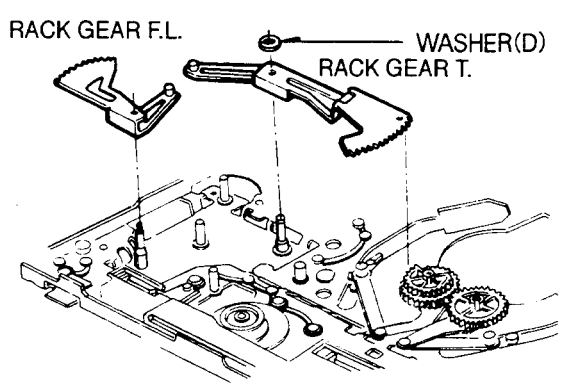

Fig. B-25-3 Rack Gear F.L/Rack Gear T

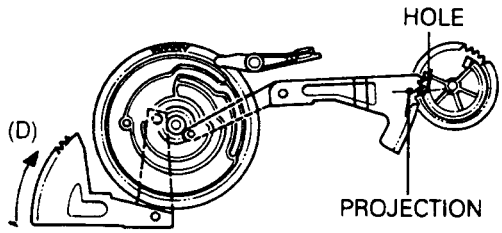

Fig. B-25-4 Rack Gear F.L/Rack Gear T/CAM Gear

26. PC Gear(Fig. B-26)

1) Remove the washer(C).
2) Remove the P.C Gear by lifting it up.

*** NOTE**

1) When reassembling

① The Groove of PC Gear should be aligned with the groove(V) of Cam Gear, and another hole of it should be aligned with the hole of chassis (Fig. B-26).

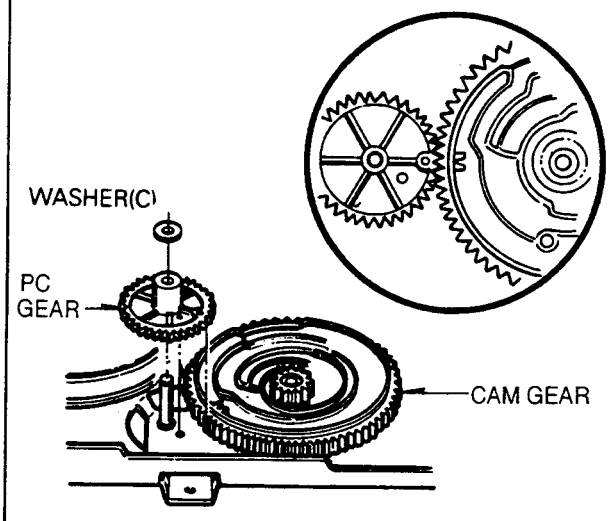

Fig. B-26 PC Gear

27. P2 and P3 Slant Assembly (Fig. B-27)

1) After finishing the disassembly of Drum Assembly, remove the P2 and P3 Slant Assembly by turning the Loading Gear(R) in the clockwise direction.(Loading direction)
2) Loosen the set screws.
3) Remove the Roller Guide from the Slant Base.

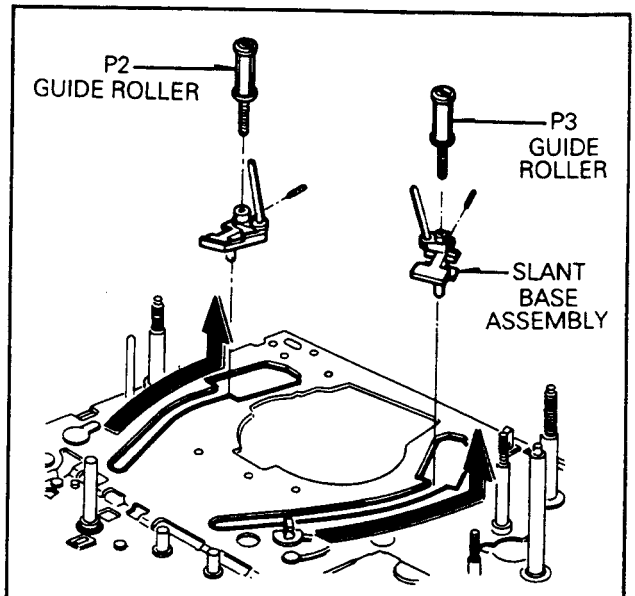

Fig. B-27 Slant Assembly

*** NOTE**

1) When disassembling and reassembling

① Use a Hexagonal wrench to remove set screw.

② Take notice that the P2 and P3 Slant Assembly should not be changed from their original place.

28. Loading Gear Assembly(L),(R) (Fig. B-28)

1) Remove the Cam Gear, Rack-T.
2) Remove the P2 and P3 Slant Assembly by turning the Loading Gear(L),(R) in the Loading direction
3) Lift up the Loading Gear Assembly(L),(R) from the Deck Mechanism Assembly.
4) Remove the Spring Load(L),(R).
5) Separate the Loading Gear(L), (R) from Arm Load(L), (R).

*** NOTE**

1) When reassembling

① Make sure that the Loading Gear(L) and (R) should not be changed from their original place.

② Align the groove of Loading Gear(L),(O) with the groove of Gear(R),(O).

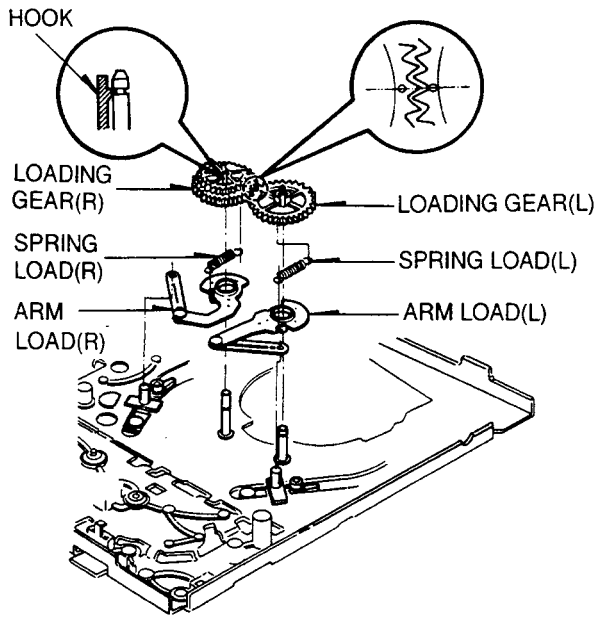

Fig. B-28 Loading Gear Assembly

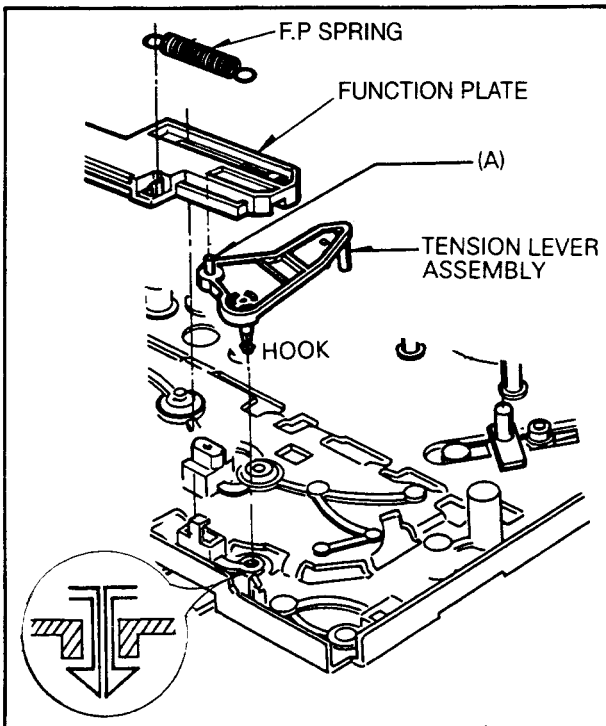

Fig. B-29 Tension Lever Assembly

29. Tension Lever Assembly (Fig. B-29)

1) Remove the Function Plate.
2) Remove the Tension Lever Assembly by pushing hooks inward.

*** NOTE**

1) When reassembling

① Set the part(A) of Tension Lever Assembly in the groove of Lower part of Function Plate.

30. Clutch Gear Assembly (Fig. B-30)

1) Remove the Pulley Gear.
2) Remove the Plate Function.
3) Remove the washer(A), and then remove the Clutch Gear Assembly.

*** NOTE**

1) When reassembling

① Do not disassemble the Clutch Gear Assembly any further, because Torque adjustment is not adjustible.

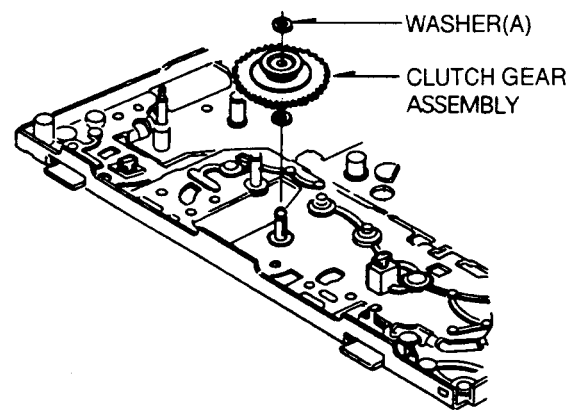

Fig. B-30 Clutch Gear Assembly

MECHANISM ADJUSTMENTS

• Tools and Fixtures for Deck

1. Back tension meter Parts No : D00-D006 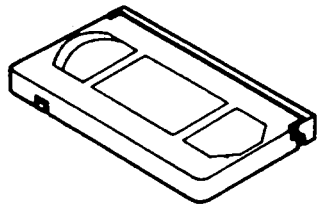	2. Alignment tape Parts No NTSC: DTN-0001 PAL : DTN-0002 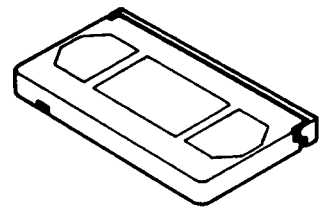	3. Torque gauge Parts No : D00-D002
4. Torque gauge adaptor Parts No : D09-R001 	5. Post height adjusting driver Parts No : DTL-0005 	6. M3 Nut driver Parts No : DTL-0006 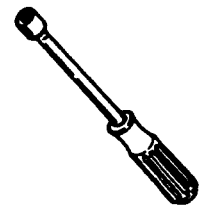

1. Mechanism State Switch (Mode Switch) Check

Purpose: To detect accurately the mechanism state and prevent the mechanism from malfunction.

Test Equipment/Fixture	VCR State	Check Point
● Blank tape	● Eject Mode (with cassette ejected)	● Mechanism state switch (Mode Switch and Cam)

Check Procedure

1) Turn the VCR on and eject the tape by pressing eject button.
2) Remove the Cabinet Top, the Main P.C.Board and the CST Housing. Then push the CST IN/OUT switch (Loca. #137) and eject button at the same time.
3) Turn the worm (Loca. #082) of Loading Motor Assembly (Loca. #A10) to the left side (counter-clockwise) to align the three holes (A) of the Pinch Gear, the P.C.Gear and the Chassis.
4) Remove the Bottom Cover and then check that the groove (V) and the hole (O) of Mode S/W are aligned each other. If the above alignment is not obtained, adjust as follows.
   (1) Remove the Bracket Assembly Bottom and the Capstan Belt in the state of power off.
   (2) Remove the P.C.B Assembly, align the groove (V) and the hole (O) of Mode S/W each other and then reassemble the P.C.B Assembly.
   (3) Turn the power on and perform the various operations to check that the loading and the unloading are correct.

Check Diagram

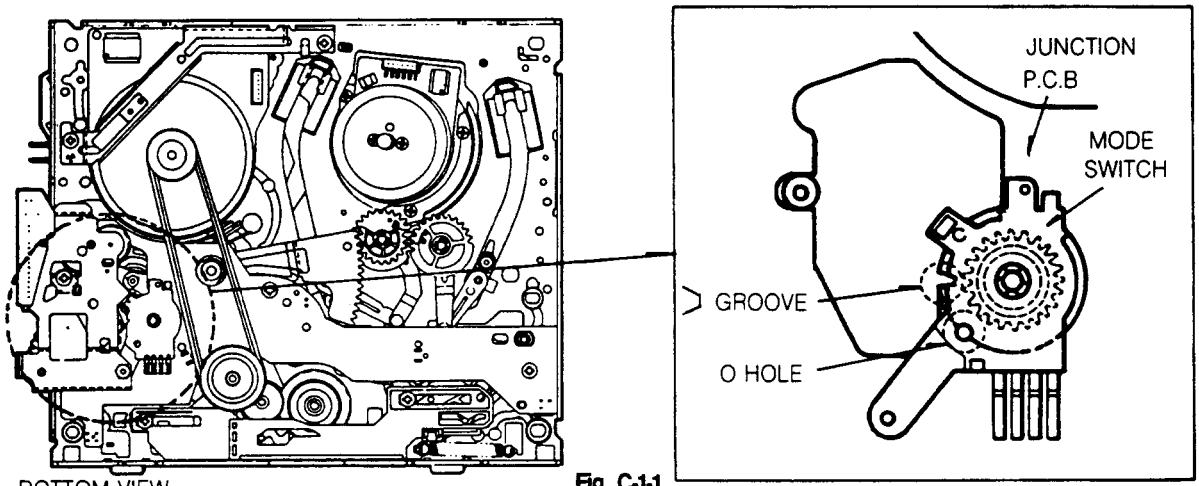

BOTTOM VIEW

Fig. C-1-1

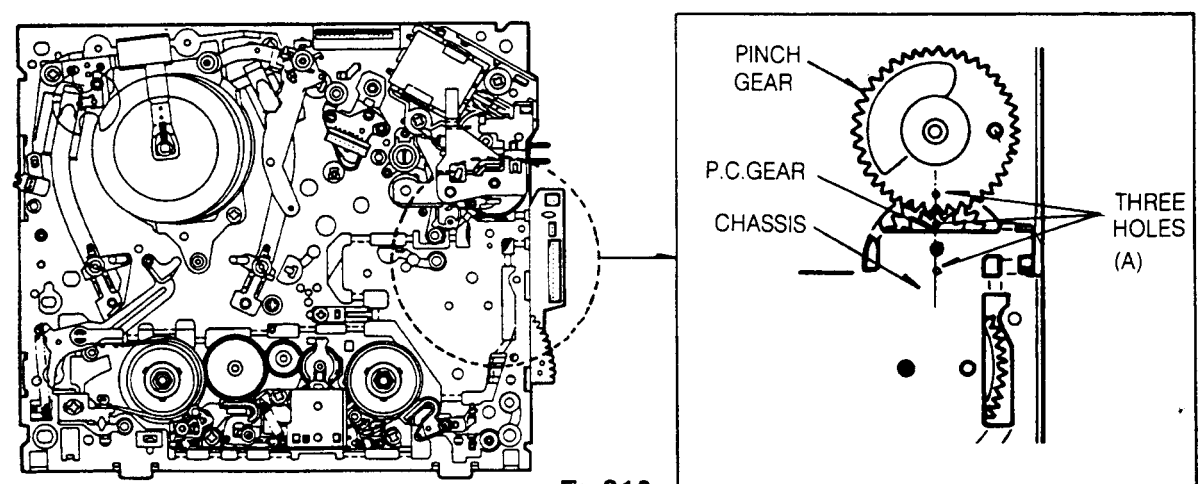

TOP VIEW

Fig. C-1-2

2. Preparation for Adjustment(To set VCR to the loading state without inserting a cassette)

1) Unplug the power cord from the AC outlet.
2) Remove the Cabinet Top and Front Loading mechanism.
3) Plug the power cord into the AC outlet.
4) Turn the VCR on and push the tact switch in the PCB Assembly.
   The VCR can accept input of each mode in this case. However the rewind and review operation cannot be performed for more than a few seconds because the take-up reel table is in the stop state and reel pulses cannot be detected.

(NOTE)

Always return the VCR to the Front Loading Mechanism Assembling State in the following order after the above operations have been performed.

1) Press the Eject button after turning the power on.
2) Wait for about 10 seconds until searching out the assembly position.
3) Assemble the Front Loading Mechanism and connect the Front Loading Mechanism Connector.
4) Refer to the "Front Loading Mechanism Disassembly" which is described previously.

3. Tension Post Position and Tension Adjustment

Purpose: To make the tension of tape constant so that the contact between the video heads and tape is stabilized.

Test Equipment/Fixture	VCR State	Adjustment Point
● Tension Meter (Tension adjustment)	● Play without cassette and with a Tension Meter	● Holder Band(B)

Adjustment Procedures

<Position Adjustment>

1) Perform loading without inserting a tape and loosen the screw that attaches the Holder Band(B) to the Deck Mechanism Assembly.
2) Insert the (-)type driver between the Holder Band(B) and the "V" groove of the chassis.
3) Move the Holder Band(B) right and left and align the center of tension post(Guide T-Post) with the center of P1(Shaft P1).(tolerance:Less than ±0.3mm)
4) Tighten the screw that attaches the Holder Band(B) to Deck Mechanism Assembly.

<Tension Adjustment>

1) Play the Tension Meter and read the Tension Meter: 38g•cm±4g•cm(reference value).
2) If the result is abnormal.
   (1) over the standard:loosen the screw, move the Holder Band(B) to the right a little and then tighten the screw and make sure that this adjustment is correct.
   (2) below the standard:loosen the screw, move the Holder Band(B) to the left a little and then tighten the screw and make sure that this adjustment is correct.

****CAUTION****

The range of movement of Holder Band(B) should be within ±1.5mm while being adjusted.
If the range is over, you should recheck the Reel Brake, Tension Arm and Spring.

Adjustment Diagram

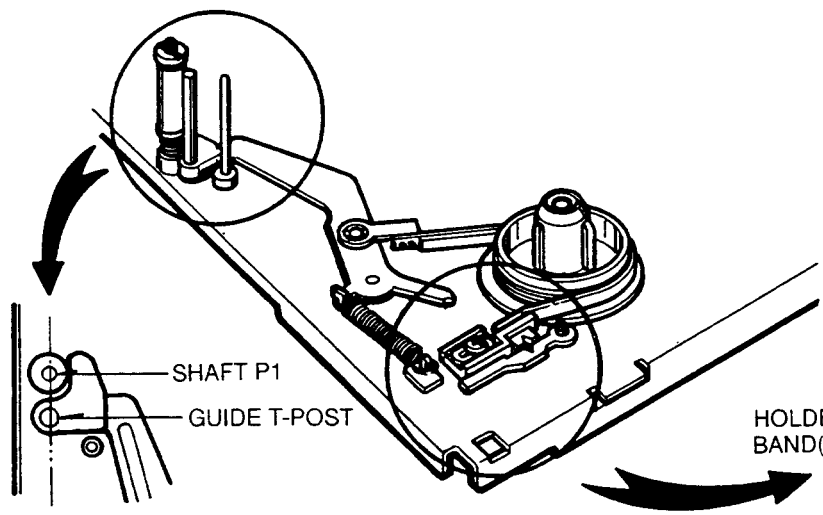

ALIGN THE CENTER OF P1 AND TENSION POST

Fig. C-3-1

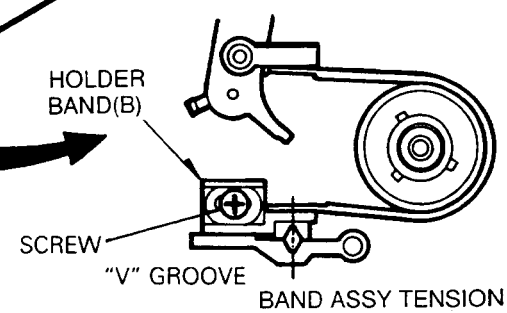

Fig. C-3-2

4. Checking Torque

Purpose: It is necessary to check the tension, torque and compression force at the tape take-up section and moving section to make the tape run smoothly and satisfy the basic performance of the VCR. Check these if the tape does not run smoothly or the tape speed is abnormal.

Test Equipment/Fixture	VCR state
● Torque Gauge ● Torque Gauge Adaptor ● Cassette Torque Meter SRK-VHT-063 : Play, Cue SRK-VHT-303 : Review	● Set the VCR to each operation mode without inserting a cassette. (See '2 Preparation for Adjustment')

Item	VCR Operation mode	Measurement Reel	Measurement Values
Main brake torque.	Eject	Supply and take-up reels	600g.cm or more
Slack removal torque	Unloading(power off)	Supply reel	120~220g·cm
Fast forward torque	Fast forward	Take-up reel	600g·cm or more
Rewind torque	Rewind	Supply reel	600g·cm or more
Play take-up torque	Play	Take-Up reel	90~150g·cm
Review Torque	Review	Supply Reel	120~180 g.cm
CUE Torque	Cue	Take-Up Reel	110~170 g.cm

Checking Method

The values are measured by using a torque gauge and torque gauge adaptor with the torque gauge fixed.

Note: This value is measured when the VCR is shifted in the unloading direction from the fast forward or rewind mode and quick braking is applied to both Reel Tables.

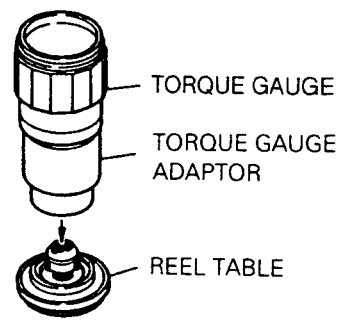

Fig. C-4

5. Guide Roller Height Adjustment

Purpose: To regulate the height of tape so that the bottom of tape runs along the tape guide line on the lower drum.

A. Preliminary Adjustment

Test Equipment/Fixture	VCR State	Adjustment Point
● Hexagonal Wrench or Bended Drive (+) Type ● Post Height Adjusting Driver	● Play an alignment tape	● Guide Roller Height Adjustment Screws on the Supply and Take-Up Guide Rollers.

Adjustment Procedure

1) Perform the precise adjustment.
2) When the Guide Roller is damaged, release the Guide Roller retaining screw and then replace the Guide Roller.

Adjustment Diagram

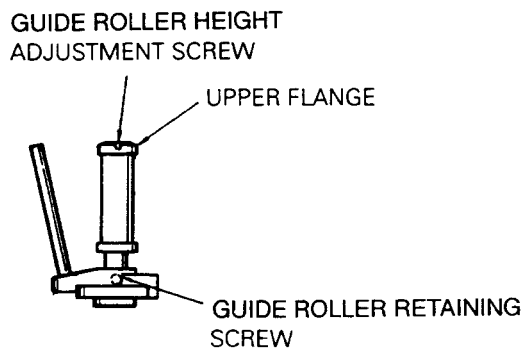

Fig. C-5-1

B. Precise Adjustment

Test Equipment/Fixture	Test Equipment Connection Points	VCR State	Adjustment Point
● Oscilloscope ● Post Height Adjusting Driver ● Alignment Tape(30HMP-2) ● Hexagonal wrench	● CH-1 : PB RF Envelope ● CH-2 (NTSC : SW30Hz / PAL : SW25Hz) ● Head Switching Output Point ● RF Envelope Output Point	● Play an alignment tape	● Guide Roller Height Adjustment Screws.

Adjustment Procedure

1) Play an alignment tape after connecting the probe of the oscilloscope to RF Envelope Output Test Point and Head Switching Output Test Point.
2) Tracking control(in PB mode): Center position(When this adjustment is performed after the drum assembly has been replaced, set the tracking control so that the RF output is maximum.)
3) Height adjustment screw: Flatten the RF waveform.
4) Turn(Move) the tracking control(playback) clockwise and counterclockwise.(to the right and left)
5) Check that any drop of RF output is uniform at the start and end of the waveform.

****CAUTION****

If the adjustment is excessive or insufficient the tape is jammed or folded.

Waveform Diagrams

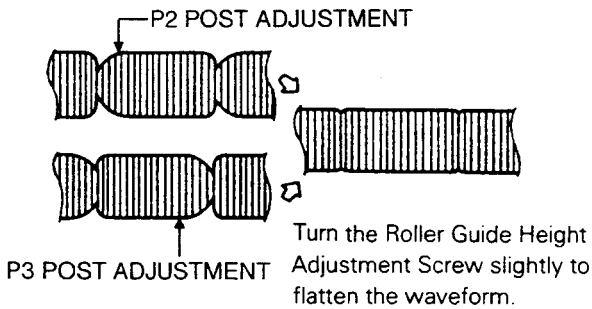

Fig. C-5-2

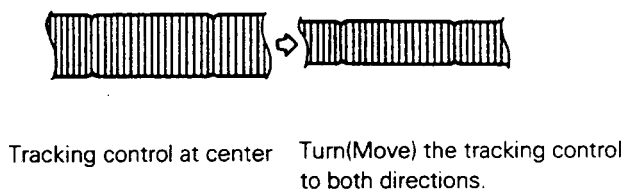

Fig. C-5-3

Connection Diagram

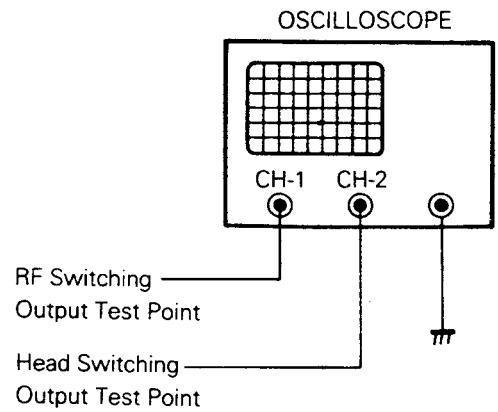

6. Audio/Control(A/C) Head Adjustment

Purpose: To keep the contact between the tape and head so that the specificed track is recorded and played back.

A. Preliminary Adjustment (Perform the preliminary adjustment, when there is no Audio Output signal with alignment tape.)

Test Equipment/Fixture	VCR State	Adjustment Points
● M3 Nut Driver		● Special screw ● Cone Point Screw for tilt ● Azimuth Adjustment Screw ● A/C Head Adjuster
● Blank tape	● Run the blank tape	

Adjustment procedure/Adjustment Diagram

1) Tighten the special screw so that the spring section protrudes 6.4mm(approx.) over the top of Head Base (1).

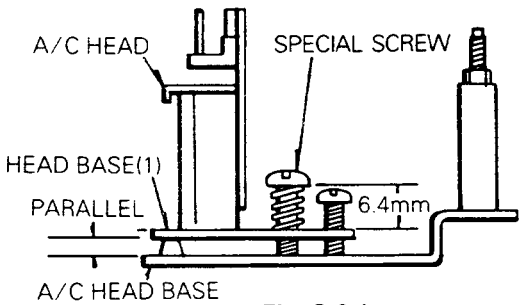

Fig. C-6-1

2) Turn the Azimuth Adjustment Screw and Cone Point Screw so that the Head Base(1) and A/C Head Base are parallel.

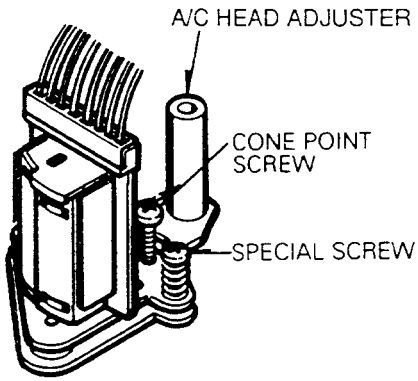

Fig. C-6-2

3) Load a blank tape and set the VCR to the play mode.

4) Confirm that the tape runs fittingly to the lower limit of the P4 post. Also confirm that the tape runs smoothly.

5) If adjustment is required, turn Cone Point Screw clockwise until curling is apparent at the lower edge of P4. Then turn Cone Point Screw counterclockwise until the curling smooths out.

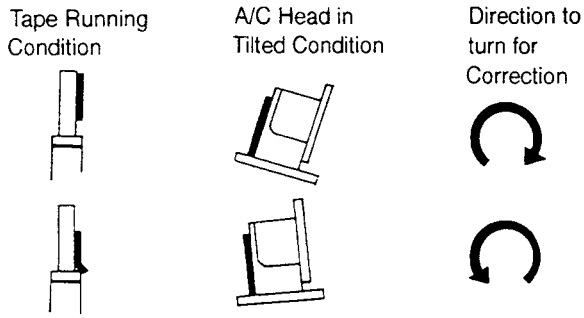

Fig. C-6-3

6) Check that there is no conspicuous curling and folding around the A/C head. If there is conspicuous curling or folding, readjust the Cone Point Screw, Azimuth Adjustment Screw and A/C Head Adjuster. When the bottom edge of tape is 0.20~0.25mm from the bottom edge of the control head's core, the height of A/C head is ideal.

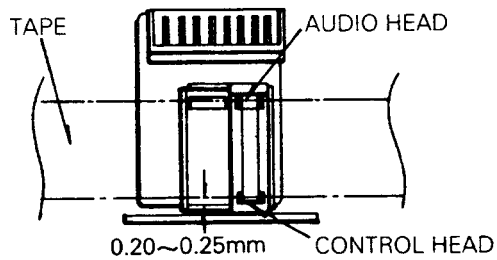

Fig. C-6-4

7) If necessary repeat steps 1 through 4 until a precise adjustment is achieved.

B. Precise Adjustment

Test Equipment/Fixture	Test Equipment Connection Point	VCR State	Adjustment Points
● Oscilloscope ● Alignment tapes ● M3 Nut Driver	● Audio output jack	● Play an alignment tape 1KHz, 7KHz sections	● Azimuth Adjustment Screw ● A/C Head adjuster ● Cone point screw

Adjustment Procedure

1) Connect the probe of oscilloscope to audio output jack.
2) Adjust the Azimuth Adjustment Screw, A/C Head adjuster and cone point screw slightly and alternately so that an Audio 1KHz output is maximum and flat. (minimum fluctuation).
3) Adjust the Azimuth Adjustment Screw slightly and alternately so that the Audio 7KHz output is maximum.

Waveform Diagram

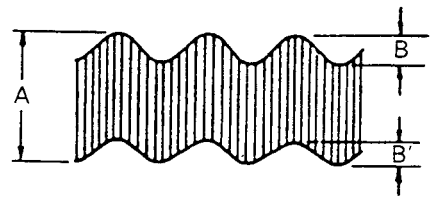

A:Maximum BB':Minimum

Fig. C-6-5

7. X-Value Adjustment

Purpose: To obtain compatibility with other VCRs.

Test Equipment/Jigs	Test Equipment Connection Points	VCR State	Adjustment Points
● Oscilloscope ● Alignment tapes ● Post Height Adjusting Driver	● CH-1:PB RF Envelope ● CH-2:SW 30Hz ● Head Switching Output Test Point ● RF Envelope Output Test Point	● Play an alignment tape	● Adjust X

Connection Diagram

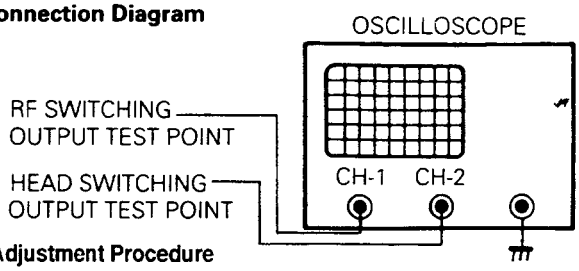

Adjustment Procedure

1) Insert a cassette tape, and then "AUTO TRACKING" will be displayed on the Digitron, then push the Tracking ⊕ or ⊖ Keys one time as soon as possible to make the VCR release the Auto Tracking.
2) Turn the Adjust X to the maximum RF Envelope level when the VCR is free from the Auto tracking.
3) If RF envelope output is maximized from the center click position in the right direction (clockwise), set the tracking control to the center and turn the X Adjust counterclockwise.
4) If in the left direction (counterclockwise), turn it clockwise by the same method.
5) In case of the 30 μ m, head will trace over a 60 μ m width track, readjust it so that RF Envelope output begins falling at the same angle when tracking control is turned either left or right.

Adjustment Diagram

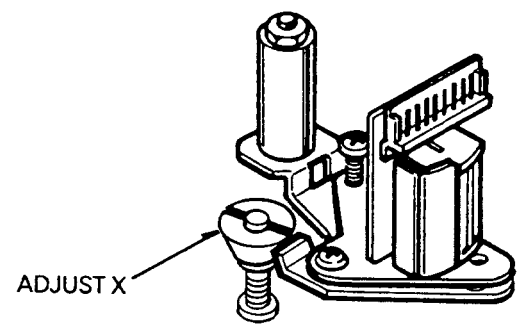

Fig. C-7

8. Adjustment after Replacing Drum Assembly(Video Heads)

Purpose: To suppress drift in the height relative to the Guide Roller and drift of the X Value after replacing the drum.

Test Equipment/Fixture	Test Equipment Connection Points	VCR State	Adjustment Points
● Oscilloscope ● Post Height Adjusting Driver ● Alignment tape ● Blank tape ● M3 Nut Driver	Checking the flatness ● CH-1:PB RF Envelope ● CH-2 (NTSC : SW30Hz / PAL : SW25Hz) ● Head Switching Output Point ● RF Envelope Output Point	● Run the blank tape ● Play an alignment tape	● Guide Rollers Precise Adjustment ● Switching point ● Tracking point ● X-Value

Connection Diagram

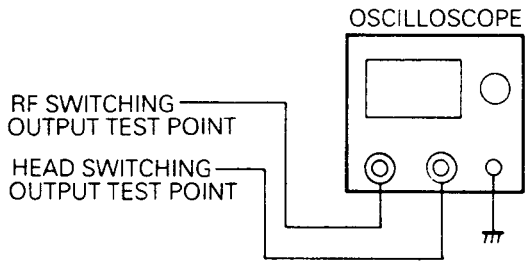

Checking/Adjustment Procedure

1) Run the blank tape, check and adjust whether the Roller Guide is curling or creasing tape around the Roller Guide.
2) Check the RF envelope output flatness and adjust the Roller Guide Height while playing an alignment tape.
3) Adjust the head switching point.
4) Check that RF envelope output is maximum when the tracking is at the initial position.
5) Adjust the Tracking Preset and X-Value Adjust with X Adjust.

Waveform Diagram

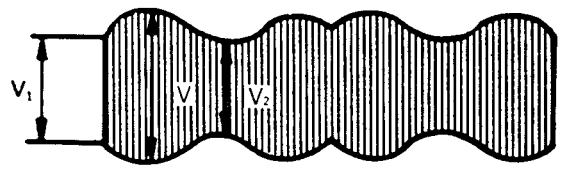

V_1/V MAX $\geqslant$ 0.7
V_2/V MAX $\geqslant$ 0.8
RF ENVELOPE OUTPUT

Fig. C-8

9. Check of Tape Travel after reassembling Deck Assembly

9-1. Check Audio and RF Locking Time during playback after CUE or REV.

Test Equipment/Fixture	Specification	Test Equipment Connection Point	VCR State
● Oscilloscope ● Alignment tape (with 6H 3kHz Color Bar Signal) ● Stop Watch	● RF Locking Time : Less than 5 sec. ● Audio Locking Time : Less than 10 sec.	● CH-1 : PB RF Envelope ● CH-2 : Audio Output ● RF Envelope Output Point ● Audio Output Jack	● Play an alignment tape (with 6H 3kHz Color Bar Signal)

Checking Procedure

1) Change the mode of CUE or REV to play.
2) At this time, confirm that the Locking Time of Audio and RF Output Waveform fits to specification.
3) If the results checked above are abnormal, reapeat adjustments 4 through 8.

※ 6H : LP

9-2. Check the coincidence of both Audio and Video Sync.(Lip Sync.)

Test Equipment/Fixture	Specification	Test Equipment Connection Point	VCR State
● Oscilloscope ● 2H 9V Tape(for X-Value Adjustment Coincidence) or alignment tape	● Less than ±0.5V	● CH-1 : PB RF Envelope ● CH-2 : Audio Output ● RF Envelope Output Point ● Audio Output Jack	● Play a 2H 9V tape or an alignment tape.

Checking Procedure

1) Confirm that the period Ⓐ of Fig. C-9-1 is within ±0.5V.
2) If the result is abnormal, repeat adjustment #7. (X-Value adjustment).

※ 2H : SP, V : Vertical

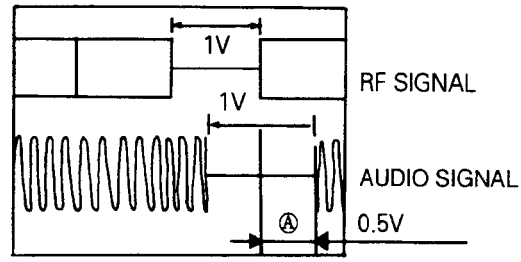

Fig. C-9-1

9-3. Check the occurance of tape curl and jam

Test Equipment/Fixture	Specification	VCR State
● T-160 Tape ● T-120 Tape	● Be sure there is no jam or curl at the beginning, the middle period or the end of the T-160 tape.	● Run the CUE, REV play mode at the beginning and the end of the tape.

Checking Procedure

1) Confirm whether the state of each transportation post is normal.
2) Make sure nothing is wrong with the operation of the Counter, when the lower part of tape is folded.
3) Be sure there is nothing wrong in the Audio signal, when the upper part of tape is folded.
4) If the result is abnormal, repeat adjustment #5 and #6.

9-4. Check the adjustment state of Take-Up Guide

Test Equipment/Fixture	Specification
● T-120 Tape ● Take-Up Guide Adjusting Driver	● Review : Travel the tape that align the top of the P4 Guide and the bottom of the Tape or be folded. ● Play : Travel the tape that align the top of the P4 Guide and the bottom of the Tape.

Checking Procedure

1) Run the CUE or PLAY mode at the middle period or the end of the T-120 tape.
2) Run the REV mode at the play or cue part of tape.
3) At this time, confirm that the change of tape height at the P4 Guide fits to specification.
4) If the result is abnormal, refer to Table 9-1.
5) Play the beginning of T-120 tape(within 5 min.)
6) Confirm that the state of tape transportation fit to specification in P4 Guide.
7) Remove the Tension Arm Assembly by rotating in the clockwise direction and then confirm that the state of tape transportation fit to specification.
8) If the result is abnormal, refer to Table 9-1.

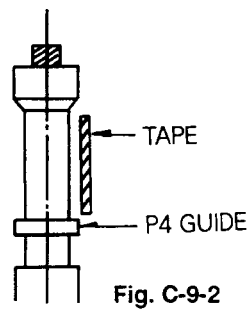

Fig. C-9-2

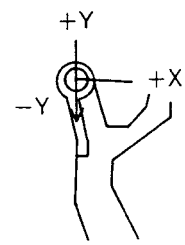

Fig. C-9-3

PLAY Mode	REV Mode	Adjustment Method
Tape Falling	Tape Lift	Bend the shaft of the direction +Y.
Tape Lift	Tape Falling	Bend the shaft of the direction -Y.

Table 9-1

10. Maintenance/Inspection Procedure

(1) Required Maintenance

The recording density of a VCR is much higher than that of an audio tape recorder. VCR components must be very precise, at tolerances of 1/1000mm, to ensure compatiblity with other VCRs. If any of these components are worn or dirty, the symptoms will be the same as if the part is defective. To ensure good picture, periodic inspection and maintenance, including replacement of worn out parts and lubrication, are necessary.

(2) Scheduled Maintenance

Schedules for maintenance and inspection are not fixed because they vary greatly according to the way in which the customer uses the VCR, and the environment in which the VCR is used.

But, in general home use, a good picture will be maintained if the inspection and maintenance is made every 1,000hours. The table below shows the relation between time used and inspection period.

Table 1

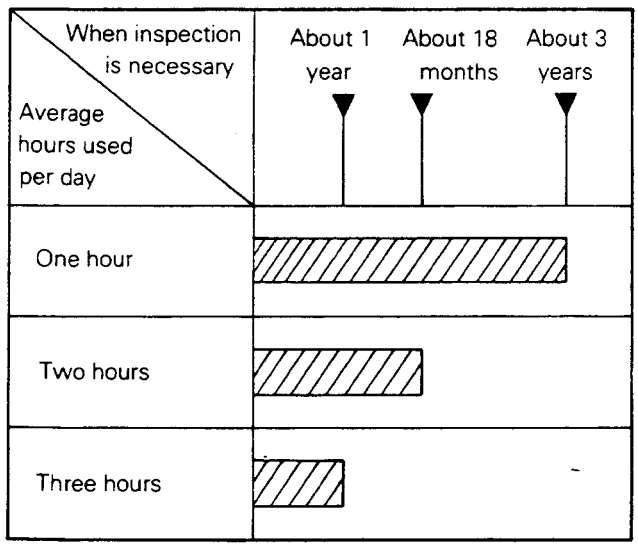

(3) Check before starting repairs

The following faults can be remedied by cleaning and oiling. Check the needed lubrication and the conditions of cleanliness in the unit.

Check with the customer to find out how often the unit is used, and then determine that the unit is ready for in spection and maintenance. Check the following parts.

Table 2

Phenomenon	Inspection
Poor S/N, no color	Dirt on video head or worn video head
Tape does not run or tape is slack	Dirt on pressure roller, belt or flywheel belt
Vertical jitter, horizontal jitter	Dirt on video head or in tape transport system
Color beats	Dirt on full-erase head
Low volume or sound distorted	Dirt on audio/control head
Fast forward or rewind is not done or rotation is slow	Dirt on belt

(4) Supplies Required for Inspection and Maintenance

(1) Greases Kanto G-31(or equivalent)
(2) Alcohol(Isopropyl Alcohol)
(3) Cleaning Patches

5) Maintenance Procedure

5-1) Cleaning

(1) Cleaning video head

First use a cleaning tape. If dirt on head is too stubborn to remove by tape, use the cleaning patch. Coat the cleaning patch with alcohol(Isopropyl Alcohol) to the point indicated. Touch the cleaning patch to the head tip and gently turn the head(rotating cylinder) right and left.

(Do not move the cleaning patch vertically and make sure that only the buckskin on the cleaning patch comes into contact with the head. Otherwise, the head may be damaged.)

Thoroughly dry the head. Then run test tape. If alcohol (Isopropyl Alcohol) remains on the video head, the tape may be damaged when it comes into contact with the head surface.

(2) Clean the tape transport system and drive system, etc, by wiping with a cleaning patch wetted with alcohol (Isopropyl Alcohol).

Note:

① It is the tape transport system which comes into contact with the running tape. The drive system consists of those parts which move the tape.

② Make sure that during cleaning you do not touch the tape transport system with the tip of a screw driver and no force is applied to the system that would cause deforming.

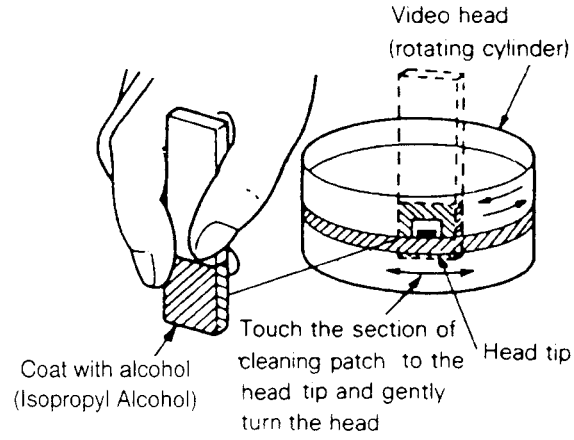

Fig. C-10-1

5-2) Greasing

(1) Greasing guidelines

Apply grease, with a cleaning patch. Do not use excess grease. It may come into contact with the tape transport of drive system. Wipe any excess and clean with cleaning patch wetted in alcohol(Isopropyl Alcohol).

(2) Periodic greasing

Grease specified locations every 5,000hours.

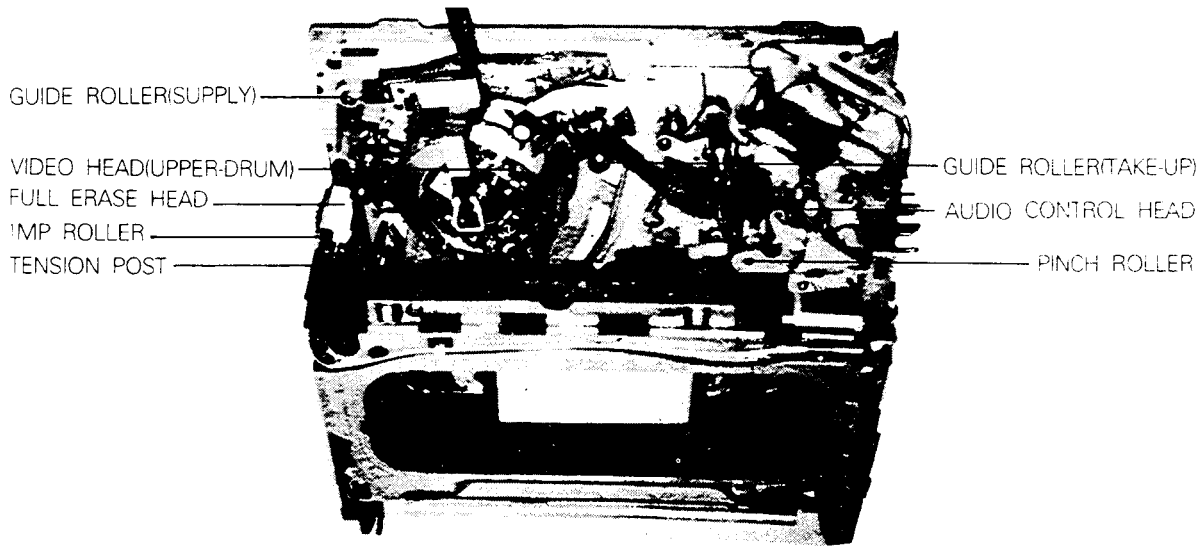

Fig. C-10-2 Tape Transport System

Phenomenon	Inspection	Replacement	
Color beats	Dirt on full-erase head	○	→ ①
Poor S/N no color	Dirt on video head	○	→ ②
Vertical jitter	Dirt on video head Dirt in tape transport system	○	→ ③
Low volume, Sound distorted	Dirt on audio/control head	○	→ ④
Tape does not run. Tape is slack	Dirt on pinch roller	○	→ ⑤

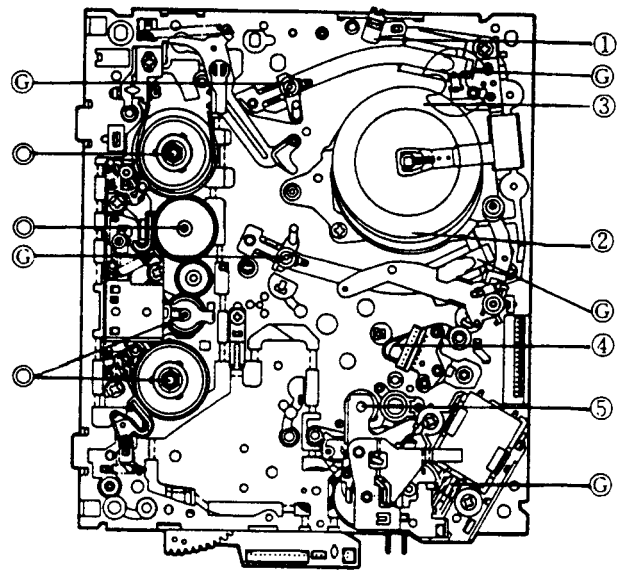

Fig. A-11 Top View of Mechanism

Phenomenon	Inspection Location	Replacement	
Do not fast forward or rewind, or rotation is slow Tape does not run Slack tape	Dirt on reel belt	○	→ ⑥

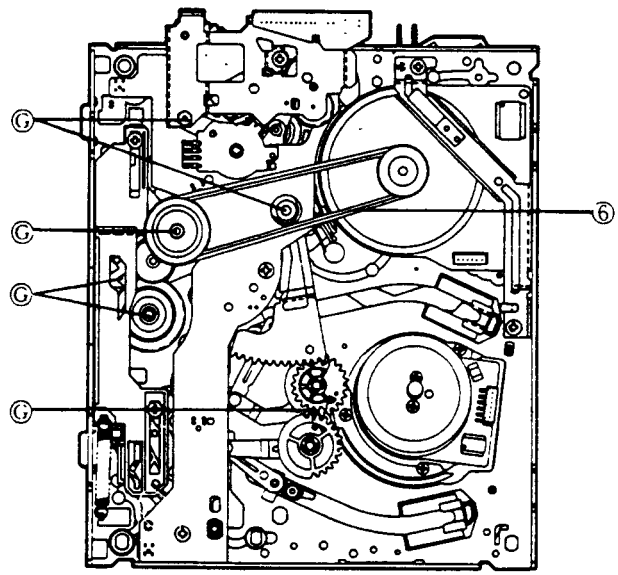

Fig. A-12 Bottom View of Mechanism

Note: If locations marked with ○ do not operate normally after cleaning, check for wear and replace.
See the EXPLODED VIEWS at the end of this manual as well as the above illustrations for the sections to be lubricated and greased.

Ⓖ:Grease
Ⓞ:Oil

MECHANISM TROUBLESHOOTING GUIDE

1. Deck Mechanism

A.

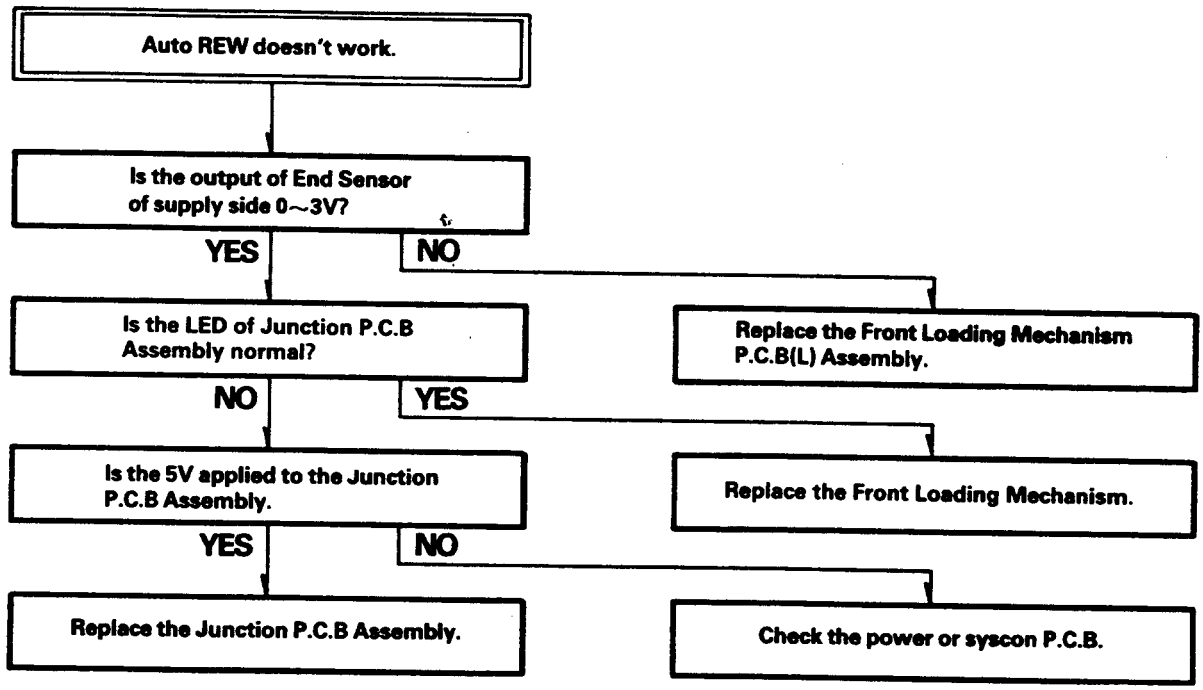

B.

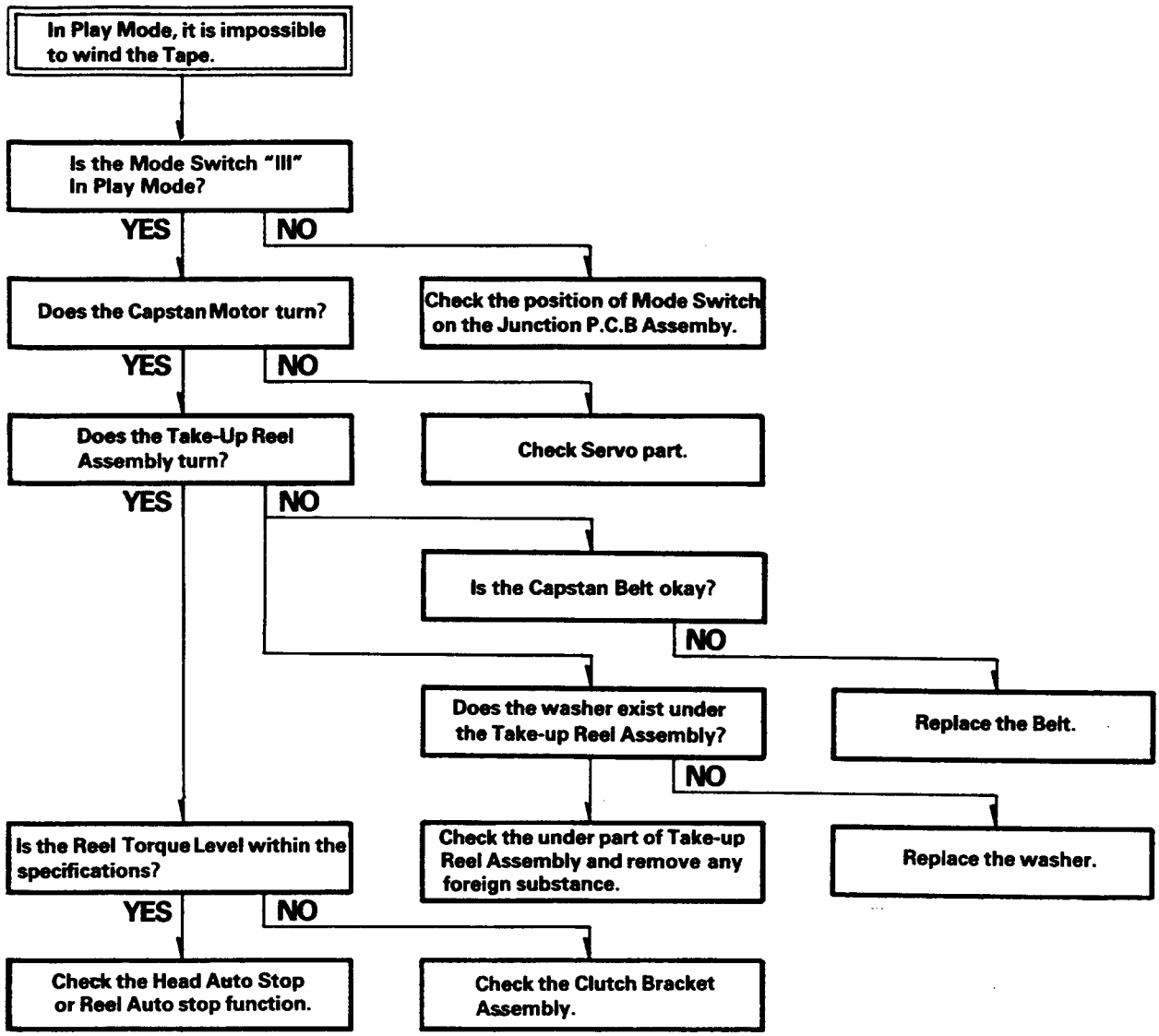
In Play Mode, it is impossible to wind the Tape.
Is the Mode Switch "III" In Play Mode?
YES
NO
Check the position of Mode Switch on the Junction P.C.B Assemby.
Does the Capstan Motor turn?
YES
NO
Check Servo part.
Does the Take-Up Reel Assembly turn?
YES
NO
Is the Capstan Belt okay?
NO
Replace the Belt.
Does the washer exist under the Take-up Reel Assembly?
NO
Replace the washer.
Check the under part of Take-up Reel Assembly and remove any foreign substance.
Is the Reel Torque Level within the specifications?
YES
NO
Check the Head Auto Stop or Reel Auto stop function.
Check the Clutch Bracket Assembly.

C.

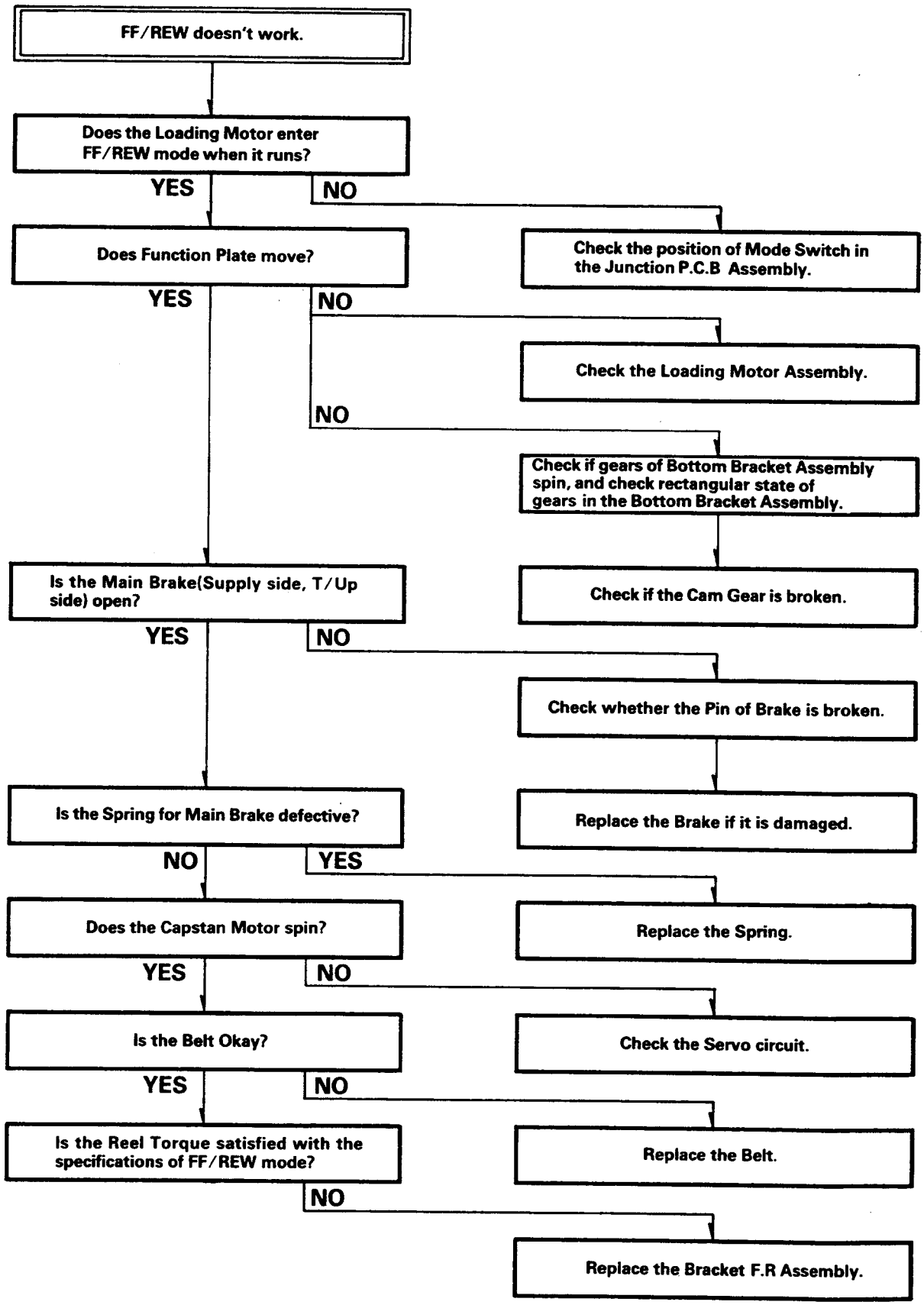
FF/REW doesn't work.
Does the Loading Motor enter FF/REW mode when it runs?
YES
NO
Check the position of Mode Switch in the Junction P.C.B Assembly.
Does Function Plate move?
YES
NO
Check the Loading Motor Assembly.
NO
Check if gears of Bottom Bracket Assembly spin, and check rectangular state of gears in the Bottom Bracket Assembly.
Check if the Cam Gear is broken.
Is the Main Brake(Supply side, T/Up side) open?
YES
NO
Check whether the Pin of Brake is broken.
Replace the Brake if it is damaged.
Is the Spring for Main Brake defective?
NO
YES
Replace the Spring.
Does the Capstan Motor spin?
YES
NO
Check the Servo circuit.
Is the Belt Okay?
YES
NO
Replace the Belt.
Is the Reel Torque satisfied with the specifications of FF/REW mode?
NO
Replace the Bracket F.R Assembly.

D.

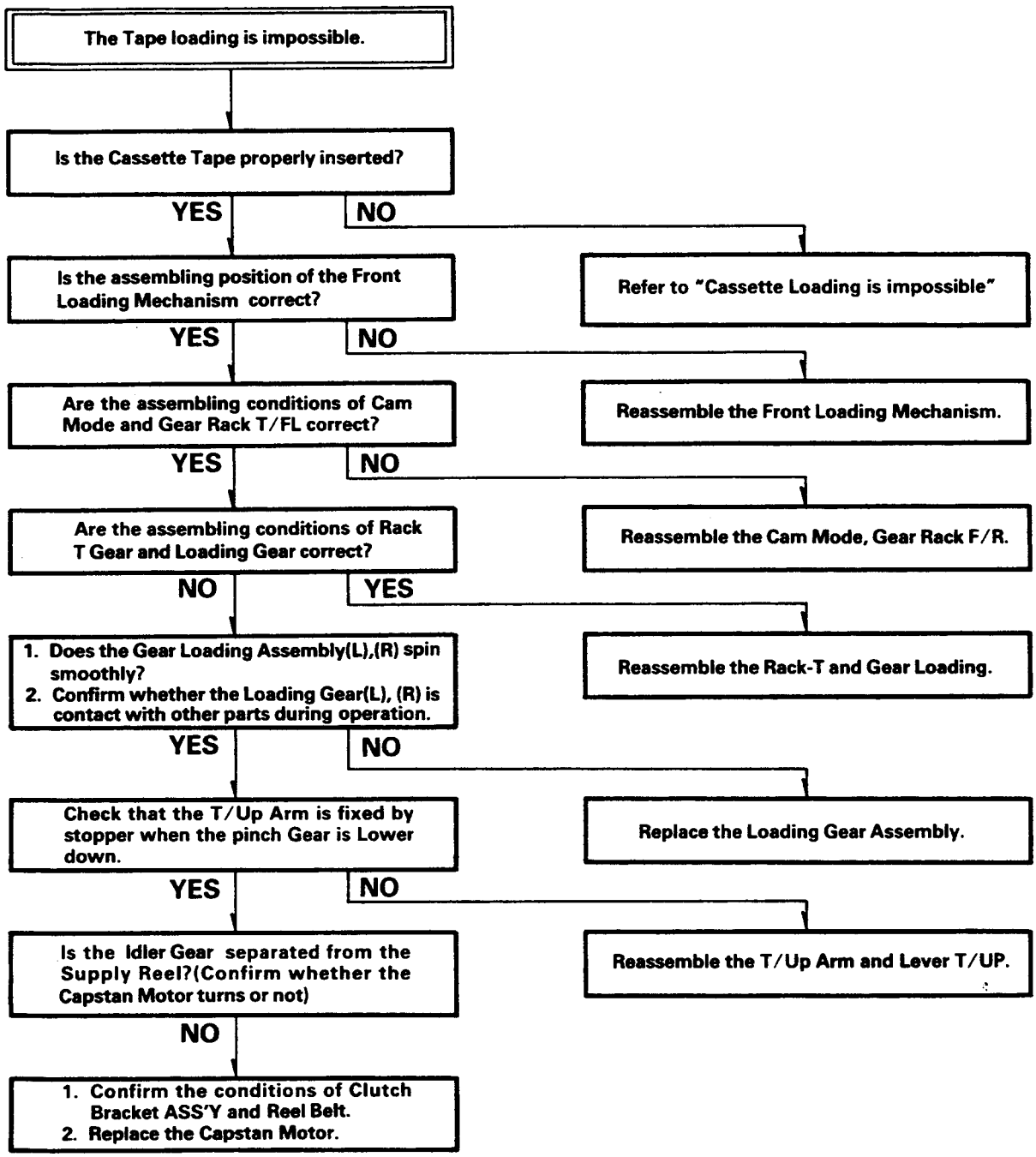
The Tape loading is impossible.
Is the Cassette Tape properly inserted?
YES
NO
Refer to "Cassette Loading is impossible"
Is the assembling position of the Front Loading Mechanism correct?
YES
NO
Reassemble the Front Loading Mechanism.
Are the assembling conditions of Cam Mode and Gear Rack T/FL correct?
YES
NO
Reassemble the Cam Mode, Gear Rack F/R.
Are the assembling conditions of Rack T Gear and Loading Gear correct?
NO
YES
Reassemble the Rack-T and Gear Loading.
1. Does the Gear Loading Assembly(L),(R) spin smoothly?
2. Confirm whether the Loading Gear(L), (R) is contact with other parts during operation.
YES
NO
Replace the Loading Gear Assembly.
Check that the T/Up Arm is fixed by stopper when the pinch Gear is Lower down.
YES
NO
Reassemble the T/Up Arm and Lever T/UP.
Is the Idler Gear separated from the Supply Reel?(Confirm whether the Capstan Motor turns or not)
NO
1. Confirm the conditions of Clutch Bracket ASS'Y and Reel Belt.
2. Replace the Capstan Motor.

2. Front Loading Mechanism

A.

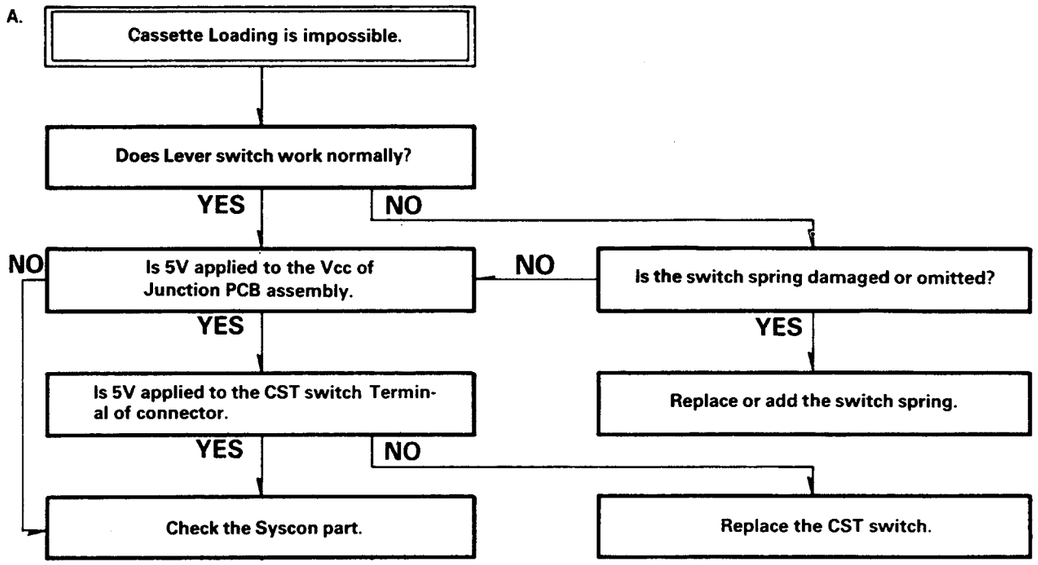

B.

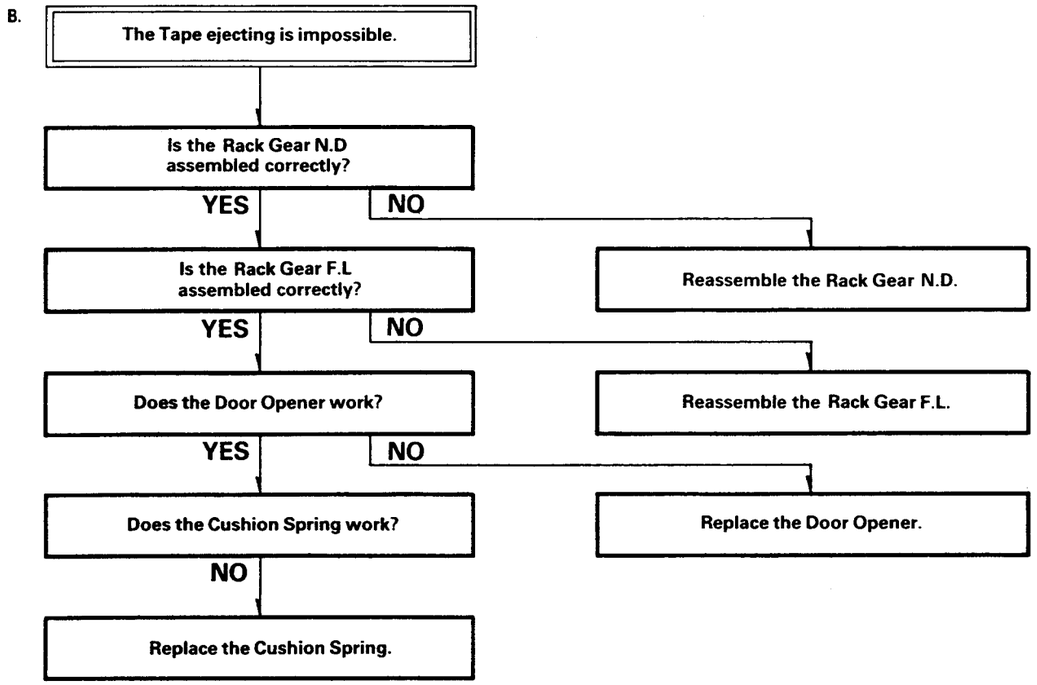

C.

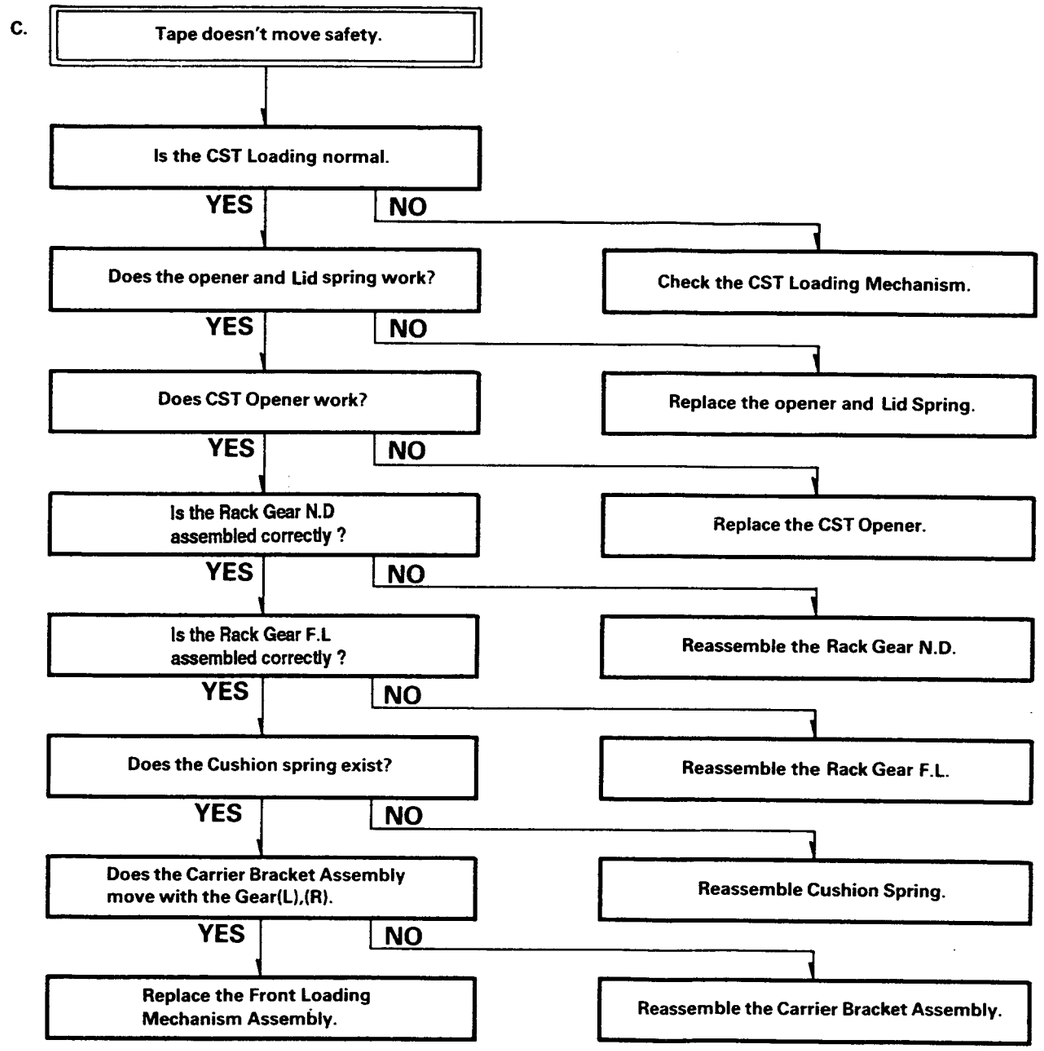

EXPLODED VIEW

1. Moving Mechanism Section(I)

NOTE) 1) Refer to "SECTION 5 REPLACEMENT PARTS LIST" in order to look for the part number of each part.
2) marks the optional parts only in VCR (Video Cassette Recorder)| Models.
3) marks the optional parts only in VCP (Video Cassette Player) Models.
4) marks the optional parts only in Hi-Fi Models.
5) (A02) is the optional parts by the Models.
6) (A01) New Type Drum Assembly. (No two screws and P.C.B on the Drum)
7) [A01] Old Type Drum Assembly. (There are two screws and P.C.B on the Drum).

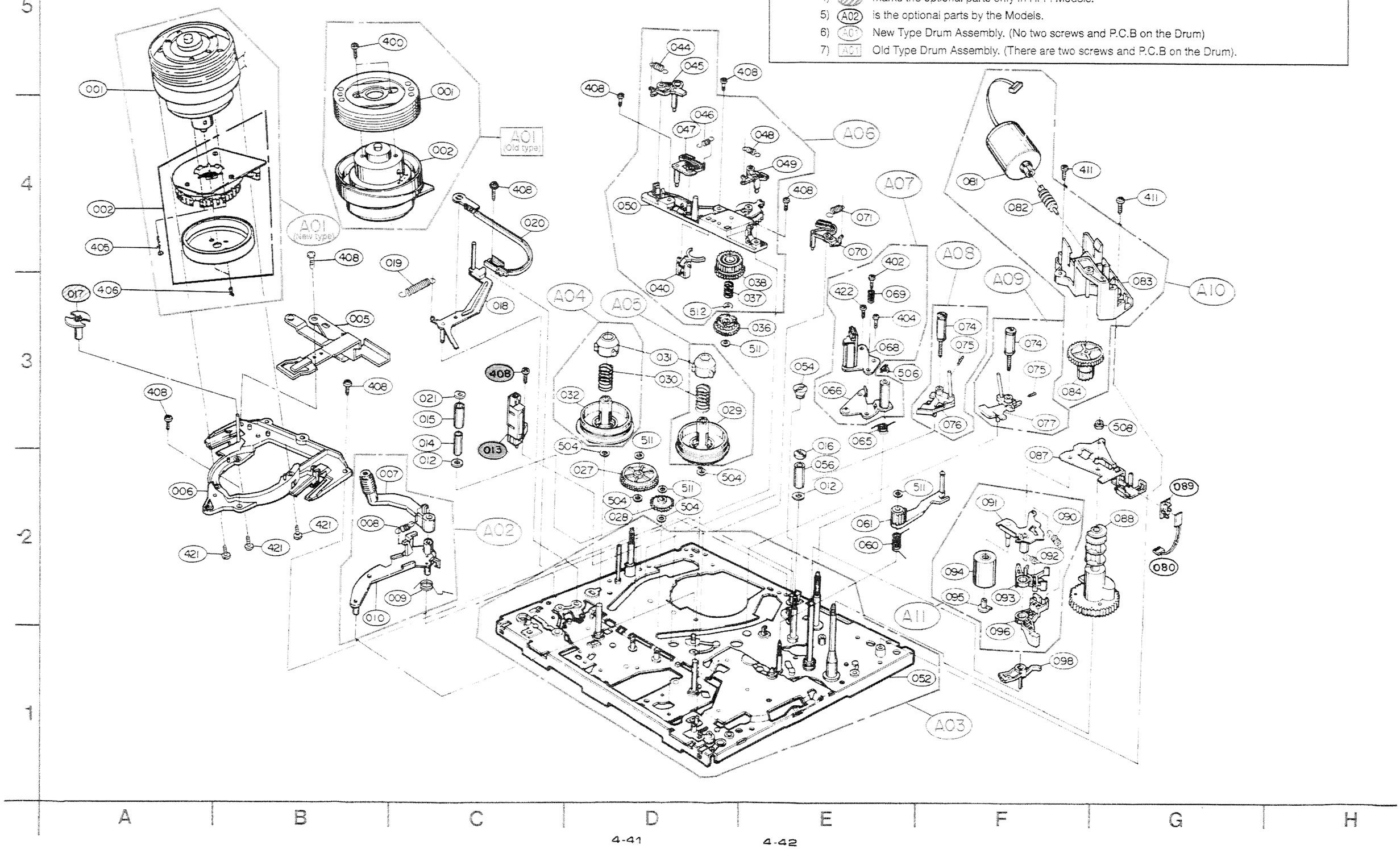

2. Moving Mechanism Section(II)

NOTE) 1) Refer to "SECTION 5 REPLACEMENT PARTS LIST" in order to look for the part number of each part.
2) (119) is the optional parts by the Models.

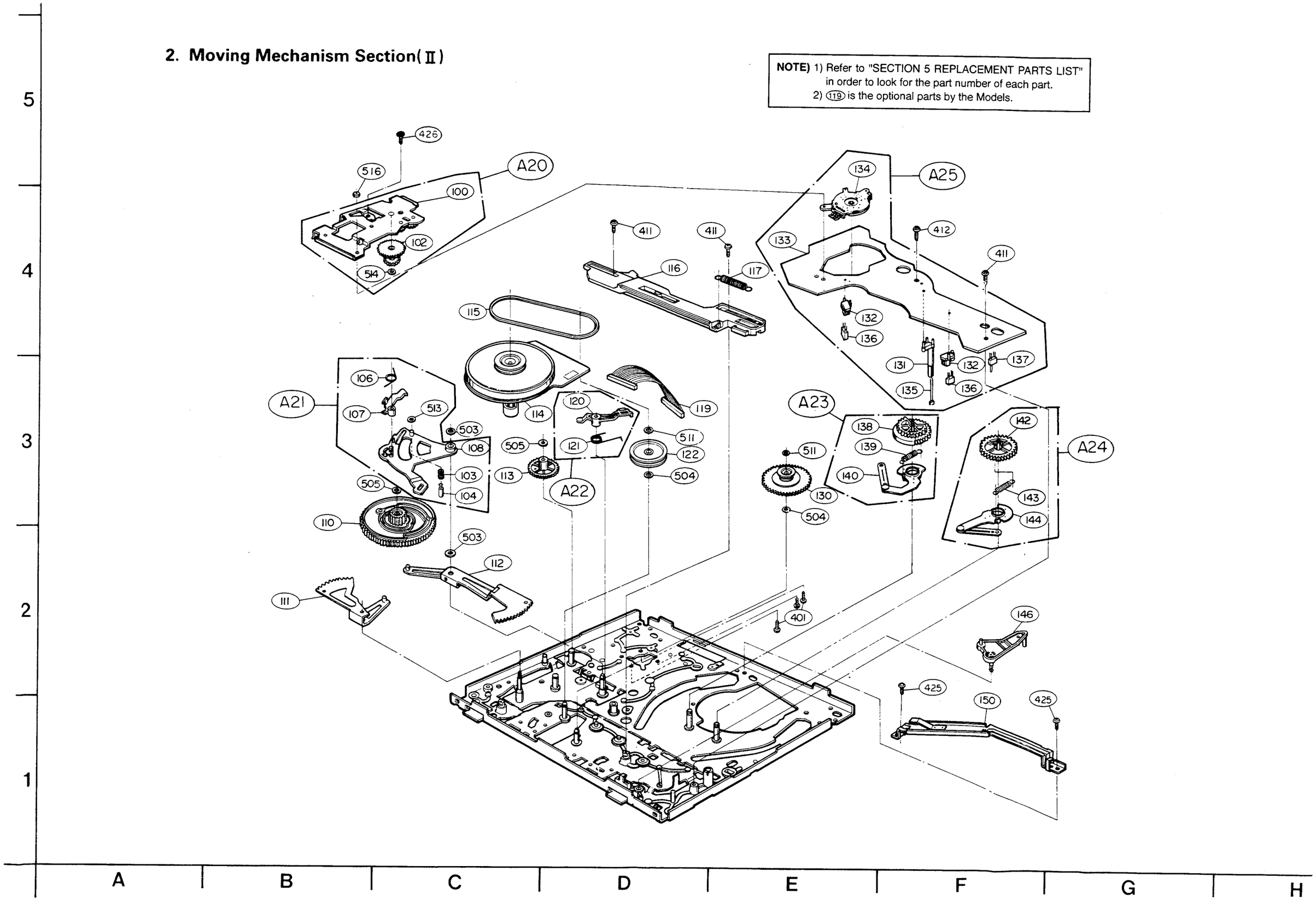

3. Front Loading Mechanism Section

NOTE) 1) Refer to "SECTION 5 REPLACEMENT PARTS LIST" in order to look for the part number of each part.

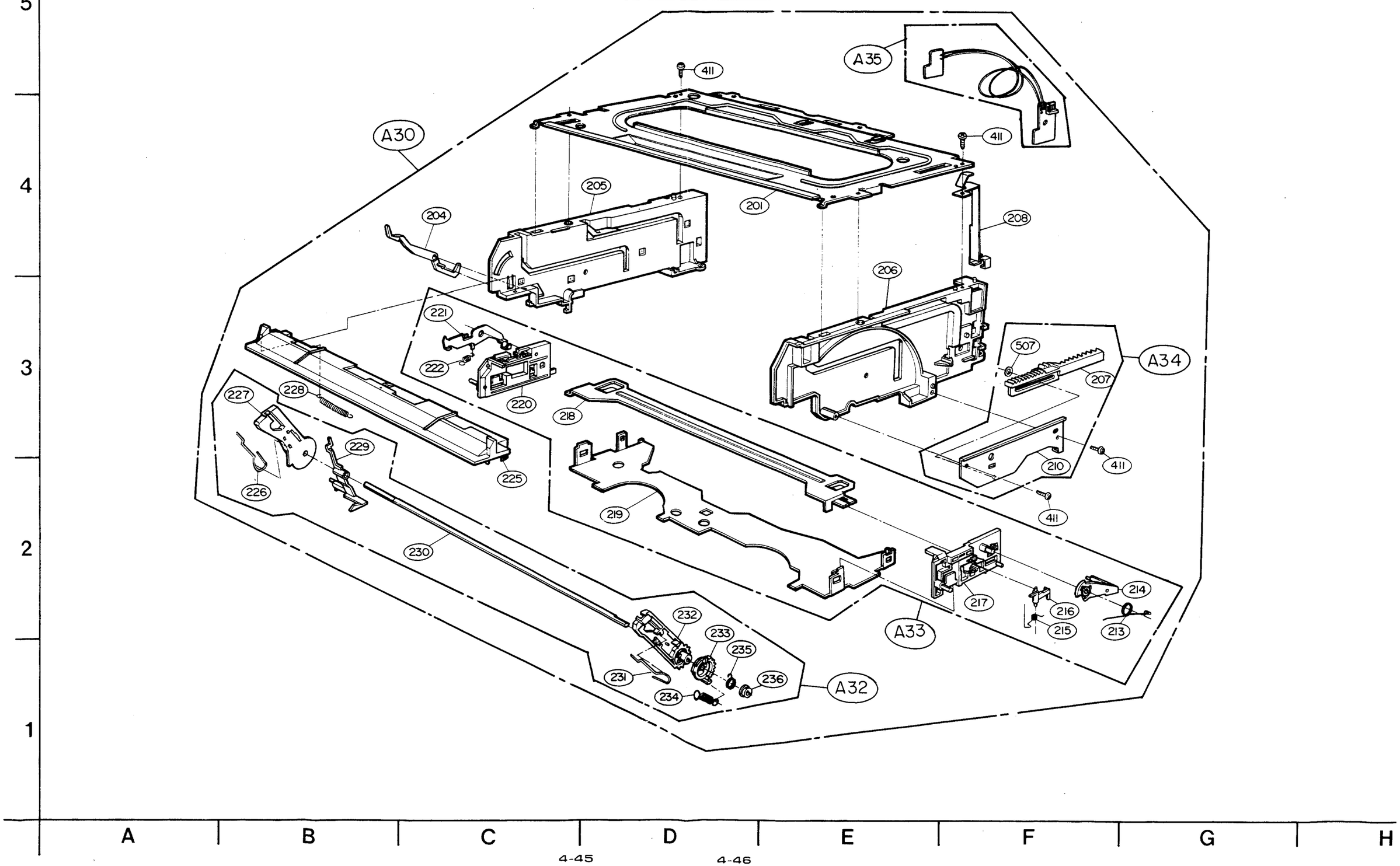

SECTION 4-2. 8 mm DECK MECHANISM

PERIODICAL CHECK AND MAINTENANCE

For the normal operation and the protection of Tape, the periodical checking and maintaining is required like the unit.
Perform the following steps after the adjustment without the used time.

1. ROTARY DRUM ASSEMBLY CLEANING

Stick the smooth swab moistened with the cleaning water fast to the rotary Drum Slightly, and then rotate the Rotary Upper Drum with a finger to the counter-clockwise slowly.

NOTE :
Be careful so the Motor is not to rotate the Drum and not to rotate to the clockwise. Do not use the swab moistened with the cleaning water to the Head Vertically.

2. TAPE LOADING COURSE CLEANING

Set the Cassette Compartment to the Eject State or remove it, and then wipe the Tape loading Course (No. 1 Guide~No. 7 Guide Capstan Shaft, Pinch Roller) with the Chamois Leather Moistened in cleaning water.

3. DRIVE SYSTEM CLEANING

Wipe the Drive System (Timing Belt, Surface of Reel Table etc.) with the Chamois Leather moistened in cleaning water.

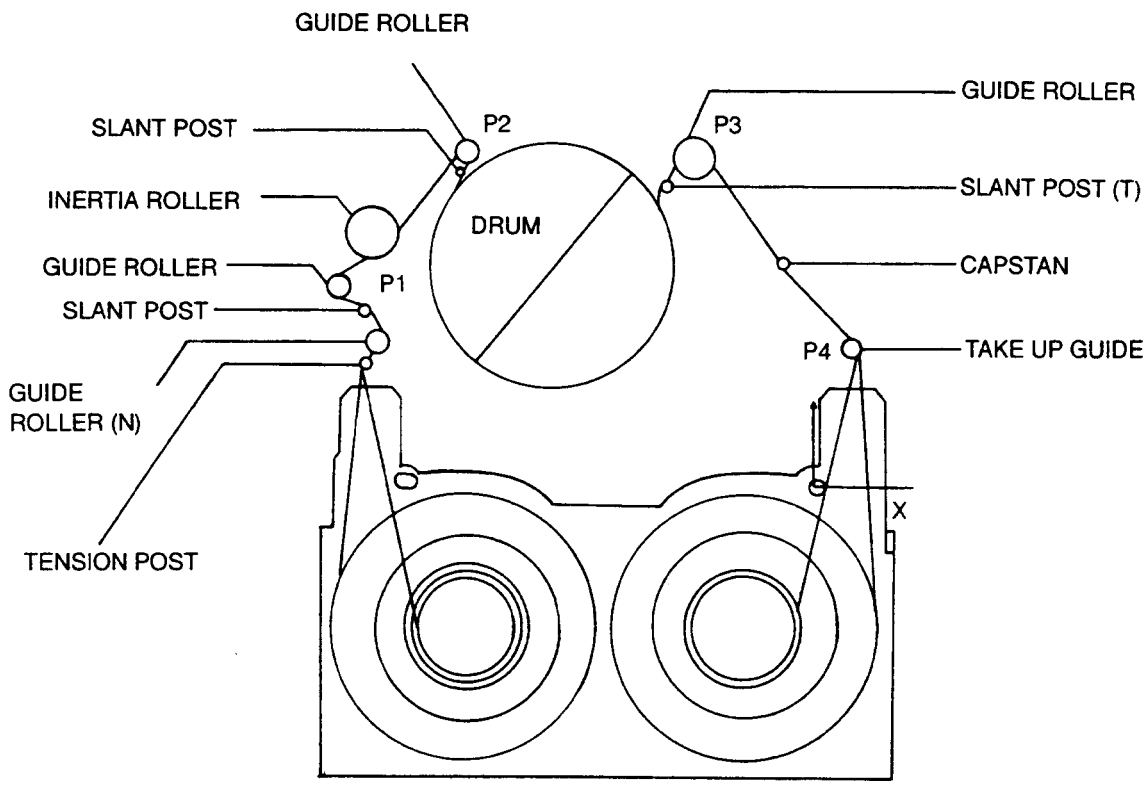

Fig. 4-1-1

4. MAINTENANCE TIME TABLE

○ Cleaning ◎Oiling ☆Checking

Check Parts		Time (Hours) (H)										Remarks
		500	1,000	1,500	2,000	2,500	3,000	3,500	4,000	4,500	5,000	
Cleaning and Demag-netizing	Tape path surfaces Cleaning	○	○	○	○	○	○	○	○	○	○	Be careful about oil
	Rotary drum assembly Cleaning and demagnetizing	○	○	○	○	○	○	○	○	○	○	Be careful about oil
Drive System	Relay belt	–	☆	–	☆	–	☆	–	☆	–	☆	
	Capstan shaft	–	◎	–	◎	–	◎	–	◎	–	◎	Be careful about that the Oil do not drop on the surface of Tape Path
	Idler pulley axle	–	◎	–	◎	–	◎	–	◎	–	◎	
	Loading Motor	–	☆	–	☆	–	☆	–	☆	–	☆	
Perfor-mance Check	Abnormal noise	☆	☆	☆	☆	☆	☆	☆	☆	☆	☆	
	Brake tension Measurement	–	☆	–	☆	–	☆	–	☆	–	☆	
	Brake system	–	☆	–	☆	–	☆	–	☆	–	☆	
	FWD, RVS torque Measurement	–	☆	–	☆	–	☆	–	☆	–	☆	

NOTE :
During checking the Unit, refer the Time Table above for the parts change etc.

Oiling :
- Use the regular Oil always.
  (If the unregular oil is used, the Unit may get demaged.)
- Apply the clean oil on the position used the shaft bearing.
- "Oil 1 drop" means the quantity of degree hanged to the end of 2mm Stick with diameter.
  (Refer to Fig. 4-1-2)

Grease :
- Use the regular Grease.

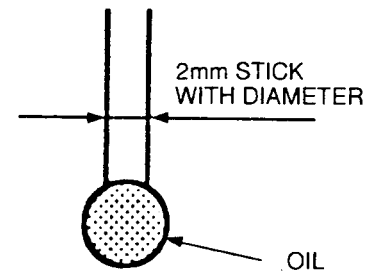

Fig. 4-1-2

DECK MECHANISM DISASSEMBLY AND REASSEMBLY

1. Front Loading Mechanism

1-1. Housing Ass'y Disassembly

1) Disassembly (Fig. 4-2-1)
   (1) Set the unit to the ULC Mode (Unloading Mode).
   (2) Remove 4 Screw(1) on the upper part and then remove the Housing Ass'y CST.

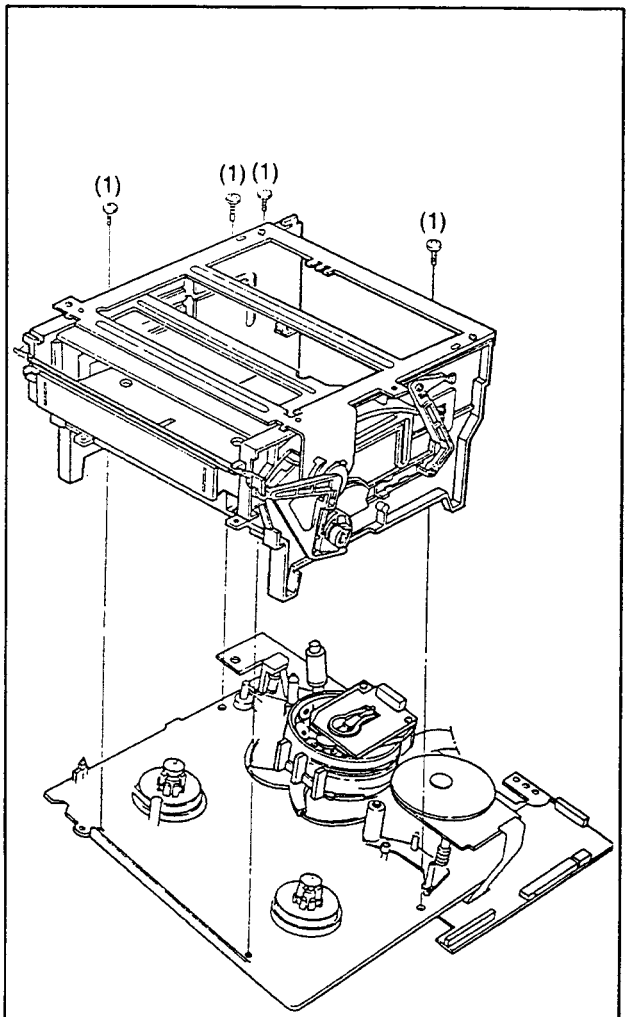

Fig. 4-2-1

2. DC MOTOR (Capstan motor) ASS'Y

2-1. Disassembly (Fig. 4-2-2)

(1) Set the Unit on the ULC Mode (Unloading).
(2) Remove the DC Motor Ass'y by releasing 3 Screws(3) on the lower part of the Chassis.

2-2. Reassembly (Fig. 4-2-2)

(1) Engage the Capstan Gear with the conversion Gear by fixing the 2 Guider bosses and 3 Guider Holes on the Upper part of Chassis into the 2 Guider Holes on the Capstan Gear.
(2) Set the DC Motor Ass'y with 3 Screws(3) on the Lower part of Chassis.

NOTES :

- Use the about 2kgfcm Torque to fix Screw.
- Do not engage with the Gears by forces, because the Capstan Gear is easy to get demaged.
- Stick the DC Motor fast to the Chassis completely.
- Do not touch the Capstan motor Axle, Oil Seal and Rotor.

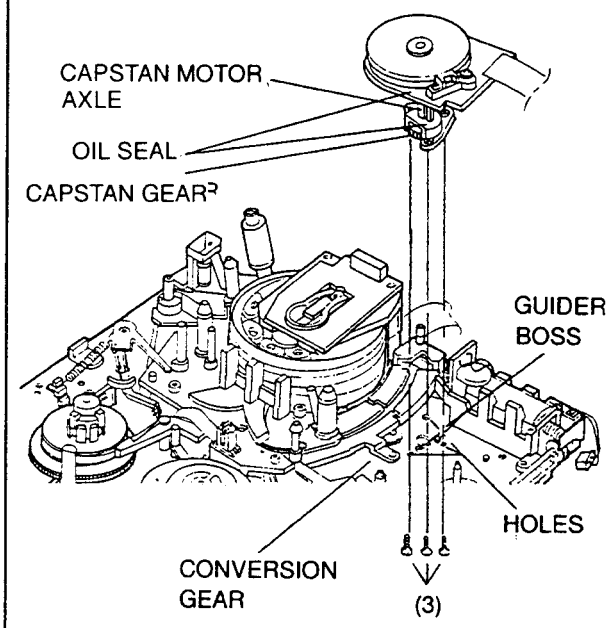

Fig. 4-2-2

3. PINCH ARM ASS'Y AND PINCH LEVER ASS'Y

3-1. Disassembly (Fig. 4-2-3)

(1) Set the Unit to the ULC Mode.
(2) Remove the Pinch Arm Ass'y by removing the stopper Washer.
(3) Remove the Pinch Lever Ass'y.

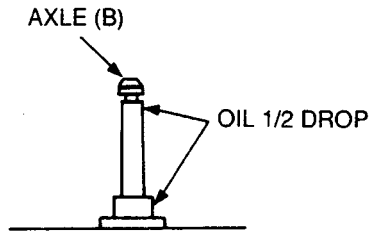

Fig. A

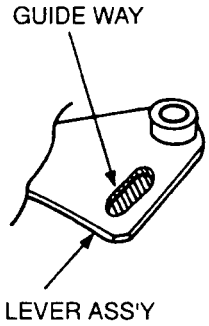

Fig. B

3-2. Reassembly (Fig. 4-2-2, 4-2-3)

(1) Apply Oil 1/2 drop to the Axle(B) 2 point.
(2) Apply greese in the in side of Guide on the Pinch Lever Ass'y (Fig. B).
(3) Stick the Axle(A) of Pinch Lever Ass'y in the Axle B and assemble so the Roller is to be approached to the Guide Way.
(4) Assemble so the Pinch Lever Ass'y pin is sticked in the ⓐ point by inserting the Pinch Arm Ass'y Axle(C) in the Axle (reassembling state).
(5) Set the Stopper Washer.

NOTES :

- Be careful the Nut is not to touch the Rubber Roller when reassembling the Pinch Arm Ass'y to Axle.
- Be careful the object material is not to stain the outer surface of Rubber Roller.

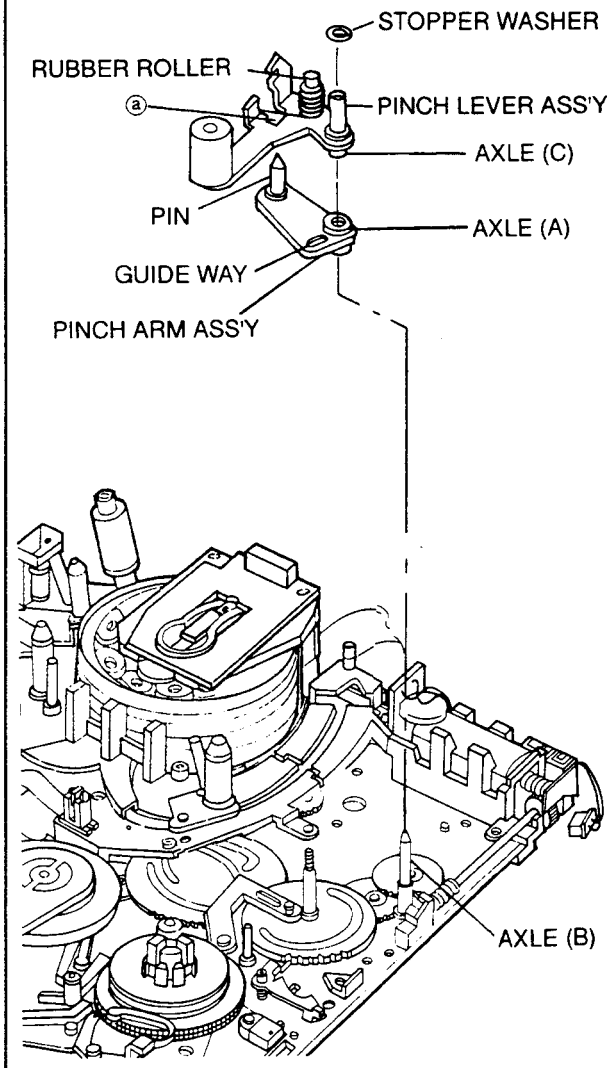

Fig. 4-2-3

4. TAKE UP ARM ASS'Y

4-1. Disassembly (Fig. 4-2-4)

(1) Set the Unit to the ULC Mode.
(2) Remove Nut(A) by using the (-) Driver.
(3) Remove Nut(B) by using the exclusive Driver.
(4) Remove the Slide Washer.
(5) Remove the Take Up Arm Ass'y.
At this time, remove after the Spring Arm ⓐ point is to be supported to the Vertical Bending part ⓑpoint of Take Up Arm Ass'y.
(6) Remove the Spring.

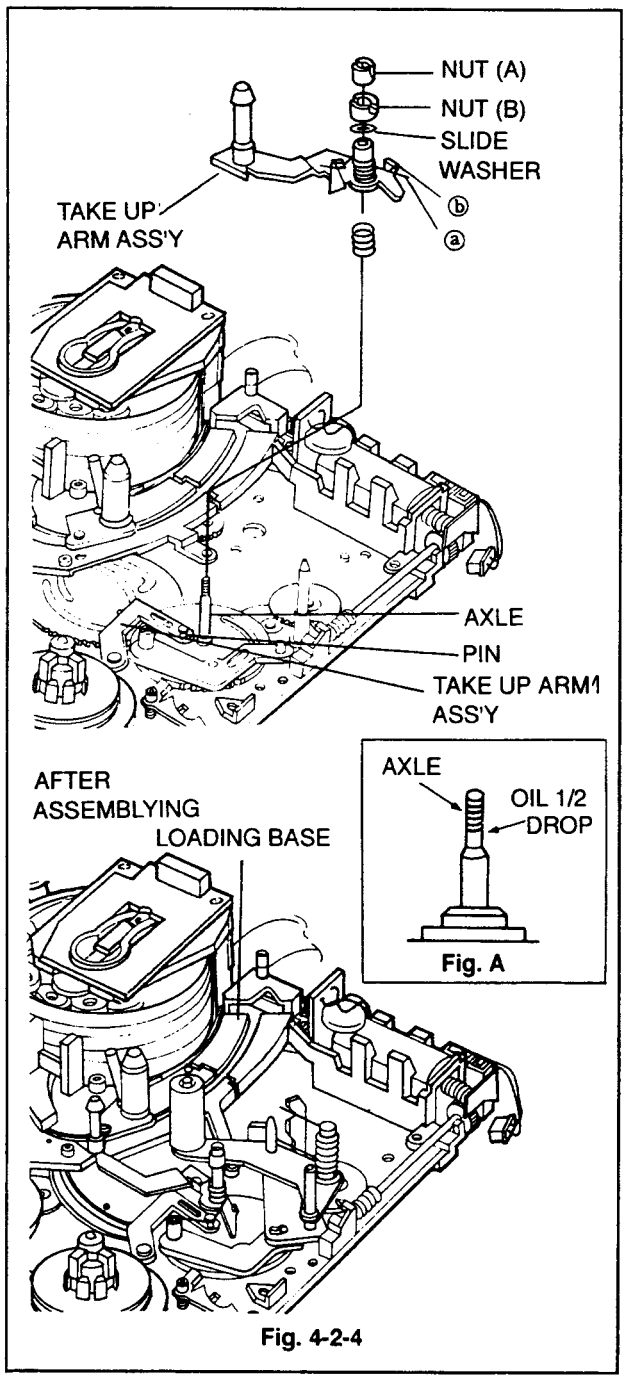

Fig. 4-2-4

4-2. Reassembly (Fig. 4-2-4)

(1) Apply the Oil 1/2 drop on the Axle.
(2) Assembly the Compression Spring, Take Up Arm Ass'y, Slide Waher, Nut(B) and Nut(A) to the Axle.
(3) Strain the Spring Arm ⓐ point of Take Up Arm Ass'y to the front to be stopped by sticking in the in side of Take Up Lever Ass'y Pin.

4-3. Take Up Arm Ass'y Height Adjustment

(1) Adjust to 3mm the height between the Cassette install standard side of Loading Base and the Frange Upper side of Take Up Arm Ass'y.

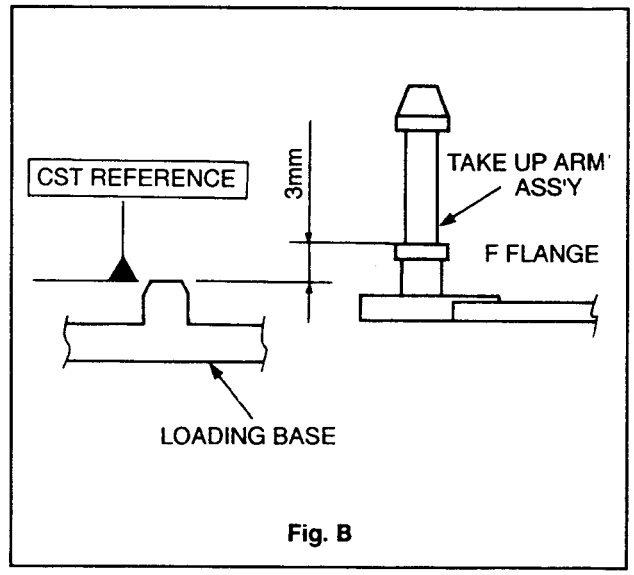

Fig. B

NOTES :

- Do not force the Spring Arm unreassembly during disassembly and reassembly, it may cause the transformation of spring.
- Readjust the Take Path after reassembly.

5. MODE LEVER ASS'Y and TAKE UP LEVER ASS'Y

5-1. Disassembly (Fig. 4-2-5)

(1) Set the Unit to ULC Mode.
(2) Remove the Stopper Washer and then remove the Mode Lever Ass'y.
(3) Remove the Stopper Washer and then remove the Take Up Lever Ass'y.

5-2. Reassembly (Fig. 4-2-4, 4-2-5)

(1) Apply the Grease in the CAM trace ⓐ of Mode Gear.
(2) Apply the Oil 1/2 drop to the Axle.
(3) Stick the Mode Lever Ass'y pin in the CAM trace ⓐ of Mode Gear and then assemble the Mode Lever Ass'y to the Axle(A).
(4) Set the Stopper Washer.
(5) Apply the Oil 1/2 drop to the Axle(B).
(6) Stick the Take Up Lever Ass'y pin in the CAM trace ⓑ of CAM Gear and then assemble the Take Up Lever Ass'y to the Axle.
(7) Set the Stopper Washer.

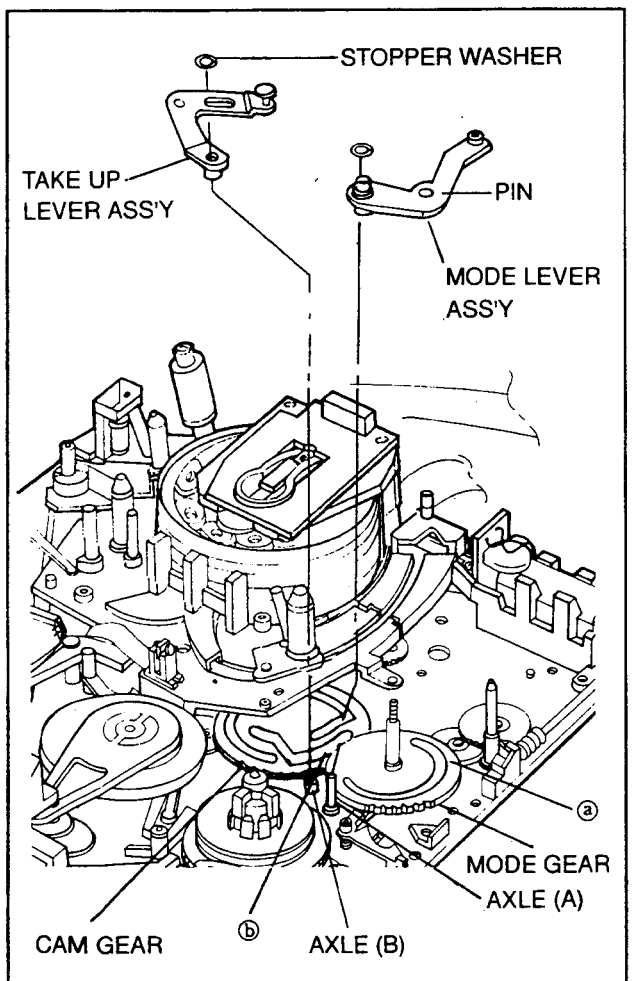

Fig. 4-2-5

6. SOFT BRAKE ASS'Y AND T/BAND PROTECT

6-1. Disassembly (Fig. 4-2-6)

(1) Set the Unit to the ULC Mode.
(2) Hook the Spring Arm point ⓒ stuck in the Vertical Bending part point ⓑ on the Upper part of Chassis to the Spring hanger of Soft Brake Ass'y.
(3) Remove the Stopper Washer and then remove the Soft Brake Ass'y.
(4) Release the Screw and remove the T/Band Protect.

6-2. Reassembly

(1) Stick the T/Band Protect in the Sensor Bracket point ⓐ.
(2) Set the Screw to point ⓐ using the (+) Driver.
(3) Set the Soft Brake Ass'y to the Axle.
(4) Set the Stopper Washer.
(5) Assemble the Spring Arm point ⓒ stuck in the Soft Brake Ass'y supports the Vertical Bending part point ⓑ on the upper part of Chassis.

NOTES :

- Use the about 1.2kgf • cm Torque to fix the T/Band Protect Set Screw.
- Do not force the Spring Arm ⓒ unreassembly, it may cause the transformation of Spring.
- During T/Band Protect assembling, be careful the Reel Ass'y Gear not to be denaged.

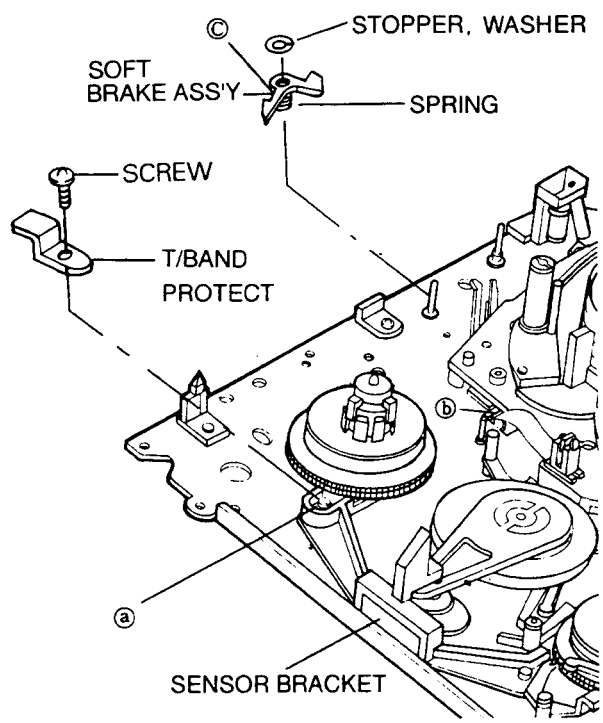

Fig. 4-2-6

7. TENSION REGULATOR ASS'Y AND SLANT ROLLER ARM ASS'Y

7-1. Disassembly (Fig. 4-2-6, 4-2-7)

(1) Set the Unit to the ULC Mode.
(2) Hook the Spring Arm point ⓐ to the Spring Hanger point ⓔ of Slant Roller Arm Ass'y.
(3) Remove the Stopper Washer and the remove the Slant Roller Arm Ass'y.
(4) Remove the Spring Hook of Tension Regulator Ass'y from the Spring Hanger point ⓒ of Bracket.
(5) Remove the Screw using the (+) Drive.
(6) Remove the Stopper Washer and then remove the Tension Regulator Ass'y.
(7) Remove the Slide Washer.

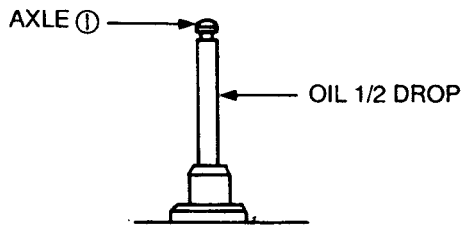

Fig. A

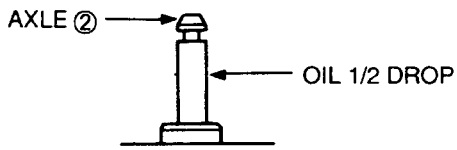

Fig. B

NOTES :

- Be careful so the Band is not to be distarted or folded and the Felt is not to be dirted by an object material during disassembly the Tension Regulator Ass'y.
- Be careful so the Roller surface is not to be dirted by an object material during disassembling the Slant Roller Arm Ass'y.

7-2. Reassembly (Fig. 4-2-7, 4-2-8)

(1) Assemble the Slide Washer to the Axle ②.
(2) Apply the Oil 1/2 drop to the Axle ②.
(3) Assemble the Felt side of T/Band Ass'y with the point ⓕ part of S-Reel Ass'y correctly by sticking the Tension Regulator Ass'y on the Axle.
(4) Assemble the Bracket Guider boss of T/Band Ass'y to accord with the Guide Hole on the upper part of Mechanism Chassis, and then set the Screw.
(5) Assemble the Stopper Washer on the Axle ②.
(6) Put up the Spring Hook at the middle point of Bracket Spring Hanger ⓒ.
(7) Apply the Oil 1/2 drop to the Axle ①.
(8) Assemble the Slant Roller Arm Ass'y on the Axle ①.
(9) Set the Stopper Washer to the Axle ①.
(10) Adjust the position of Tension Regulator FWD.
(11) Put up the Spring Hook ⓑ at the middle Claw of Bracket Spring Hanger ⓒ on the T/Band Ass'y.

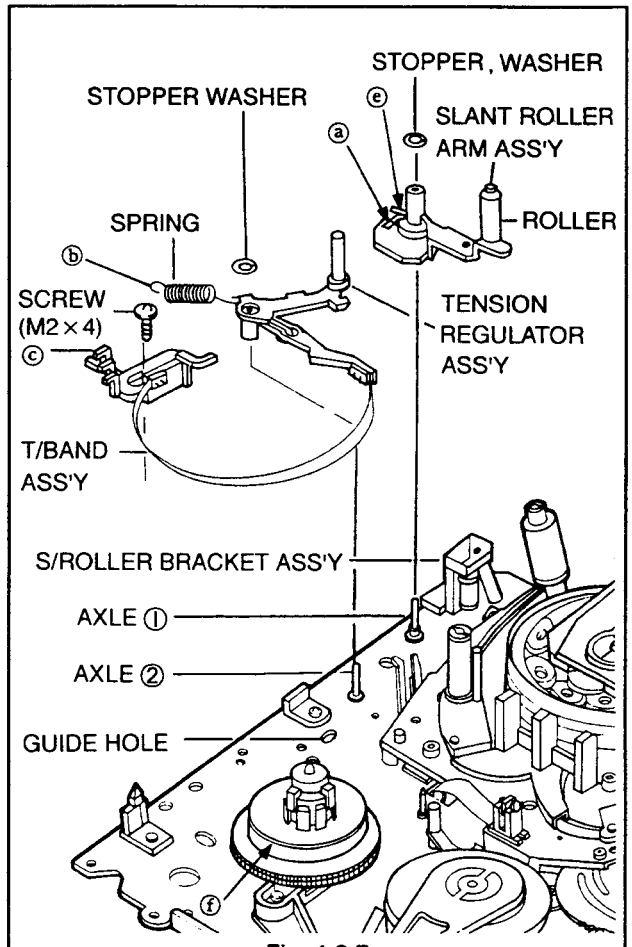

Fig. 4-2-7

NOTES :

- During assembling the Tension Regulator Ass'y, be careful the Band is not to be distorted or folded and the Felt is not to be dirted by an object material.
- Use the about 1.2kgf • cm Torque to fix the Bracket Set Screw.
- During assembling the Slant Roller Arm Ass'y, be careful the Roller surface is not to be dirted by an object material.

8. TENSION REGULATOR FWD POSITION AND BACK TENSION ADJUSTMENTS

8-1. FWD position Adjustment

(1) Set the Unit to the FWD Mode after Loading a Cassette Tape. (Loading make)
(2) Make Sure the gap between the edge of cap on the Tension Regulator Ass'y and the edge of Boss point ⓐ on the Slant Roller Arm Ass'y is 0.5~1mm.
If the gap is over the range, adjust the next step after ejecting the Cassette Tape.
(3) Remove the Set Screw of the Bracket on the T/Band Ass'y.
(4) If the measuring gap is farther than the range, draw the Bracket up to the Direction of arrow Ⓐ, and if the gap is nearer than the range, thrust the Bracket to the direct on of arrow Ⓐ, and then set the Screw.
(5) Check the gap is in the range value by adjusting steps(1), (2) repeatedly.

NOTES :

• Use a Cassette Tape wound about half.

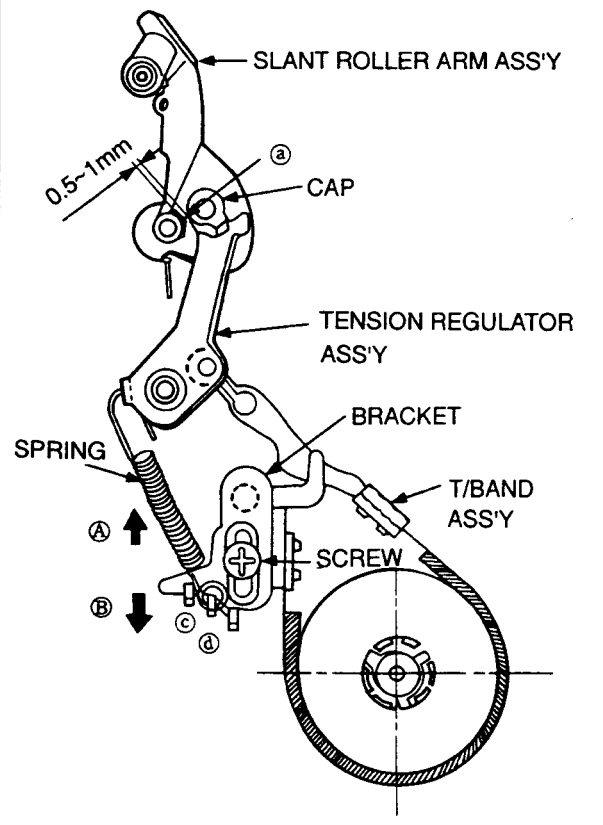

Fig. 4-2-8

8-2. Back Tension Adjustment (Fig. 4-2-8)

(1) Load the Torque Cassette Tape in the Unit and set the Unit to Ope-Mode after step, adjustment. (Forward Play Mode).
(2) Check the Back Tension Torque of the Supply side is in 6.5±2(gf • cm).
(3) Otherwise, adjust the Spring hanger position of Bracket as follows;
(4) If the measurment value is more than the range, put the Spring Hook up to the Hanger ⓒ, and if it is less than the range, put the Spring Hook up to the Hangerⓓ.
(5) Make sure the Back Tension is in the range value by adjusting steps(1), (2) repeatedly.

8-3. Reel Torque Checking

(1) Load the Torque Cassette Tape in the Unit.
(2) Set the Unit to FWD Mode and check the Torque on the T Reel Table is in 12.5±4gf • cm.
(3) Set the Unit to REV Mode and Check the Torque on the S Reel Table is in 12.5±4gf • cm.
(4) Set the Unit REV Mode and Check the Torque on the T Reel Table is in 12.5±4gf • cm.
(5) If each Torque Value is over the range, change the Reel table.

9. WORM GEAR ASS'Y MIDDLE GEAR, TRANS GEAR ASS'Y, LOADING MOTOR ASS'Y AND BRACKET ASS'Y

9-1. Disassembly (Fig. 4-2-9-1, 4-2-9-2)

(1) Remove the Screw for removed the Loading Motor Ass'y (Fig. 2-9-2). At this time, the Worm Gear Ass'y is disassembled simultaneously with the Loading Motor Ass'y ⓐ and Worm Gear Ass'y ⓑ in gear together. (Fig. 4-2-9-1)
(2) Remove the Loading Motor Ass'y and Worm SHAFT Ass'y. (Fig. 4-2-9-1)
(3) Remove the Stopper Washer and remove the Trans Gear Ass'y.
(4) Remove the Stopper Washer and remove the Middle Gear.
(5) Release the Screw to remove the Bracket Ass'y.

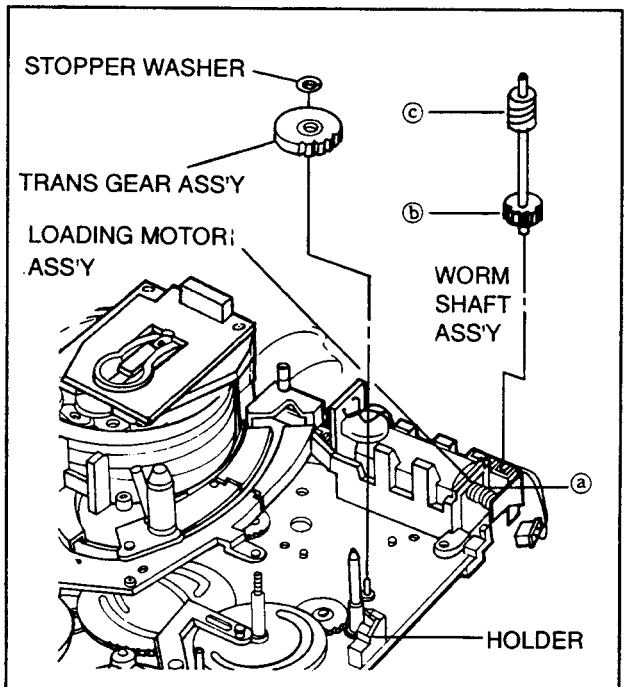

Fig. 4-2-9-1

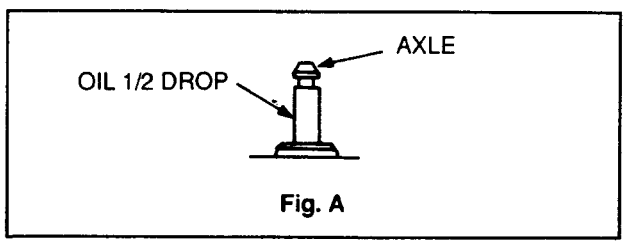

Fig. A

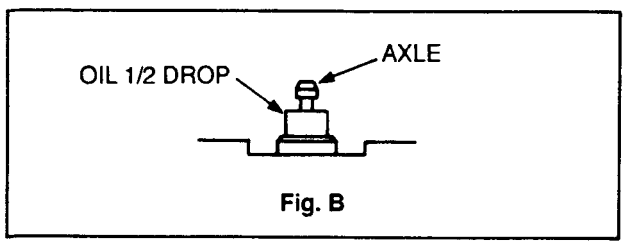

Fig. B

9-2. Reassembly (Fig. 4-2-9-2)

(1) Assemble the Guide Bosses 2 points of Bracket Ass'y to accord with the Guide Holes "ⓐ" and "ⓑ" on the upper part of Mechanism Chassis, and then set the screw.
(2) Apply the Oil 1/2 drop on the Axle.
(3) Go in gear the Mode Gear with Middle Gear by sticking on the Axle.
(4) Set the stopper Washer to the Axle.
(5) Assemble the Guide Bosses 2 points on the Lower part of Loading Motor Ass'y to accord with the Guide Holes "ⓒ" and "ⓓ" on the upper part of Mechanism Chassis and then set the Screw.
(6) After the Gear point ⓑ of Worm Gear Ass'y is to be toward below, stick it into the Gear ⓐ bottom of Loading Motor Ass'y, and fix the Shafe end tip is to be supported to the Loading Motor Bracket first tip, and then assemble the other side of Shaft by pushing from inside of Holder to outside.
(7) Apply the GREASE on the parts. (Fig. C)
(8) Apply the Oil 1/2 drop on the Axle.
(9) Go in gear with the Middle Gear and Worm Gear Ass'y Gear ⓒ together by sticking the Trans Gear Ass'y on the Axle.
(10) Set the Stopper Washer on the Axle.

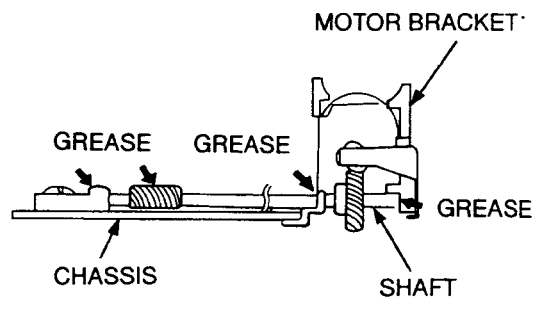

Fig. C

NOTES :

- Do not in gear the Gears by force during disassembly/reassembly of Gear, bited each other.
- During assembling the Bracket Ass'y, be careful the Roller surface is not to be dirted by an object material.
- Use the about 1.2kgf • cm Torque to fix the Screw.

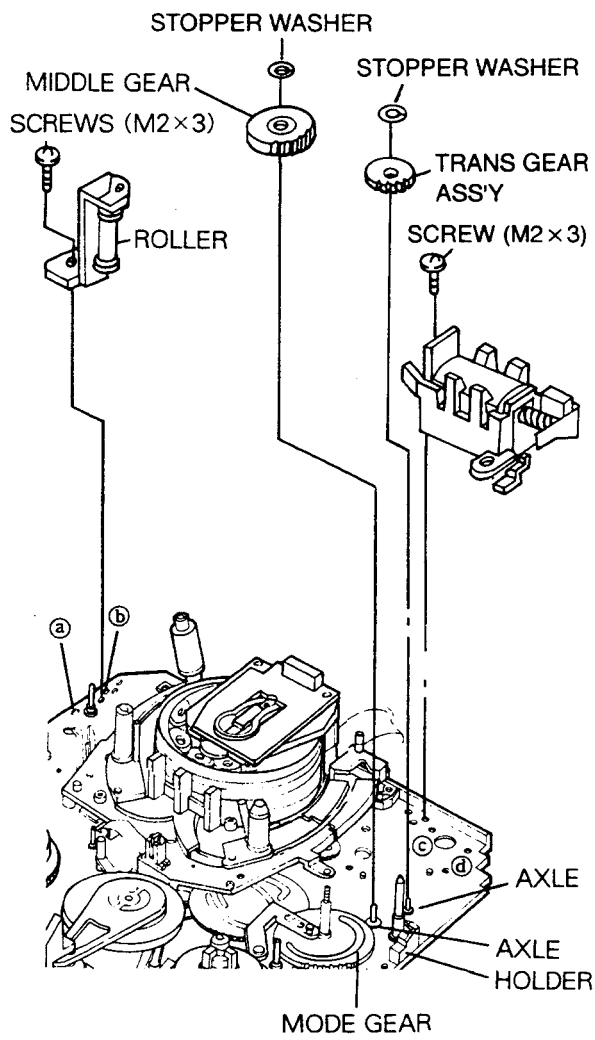

Fig. 4-2-9-2

10. LOADING BASE ASS'Y, MODE GEAR ASS'Y AND EJECT LEVER ASS'Y

10-1. Disassembly (Fig. 4-2-10)

(1) Remove the LED Ass'y from the Led assembly Hole of Loading Base Ass'y.
(2) Remove 3 Screws and then remove the Loading Base Ass'y.
(3) Release the Stopper Washer and remove the Mode Gear Ass'y.
(4) Hook the Spring Arm point ⓐ of Eject Lever Ass'y by pushing to the front to the Spring Hanger of Eject Lever Ass'y.
(5) Remove the Stopper Washer and then remove the Eject Lever Ass'y.

NOTES :

- Be careful the Led Ass'y Hook is not to danage during disassembly the LED Ass'y from the Led assembly Hole of Loading Base Ass'y.

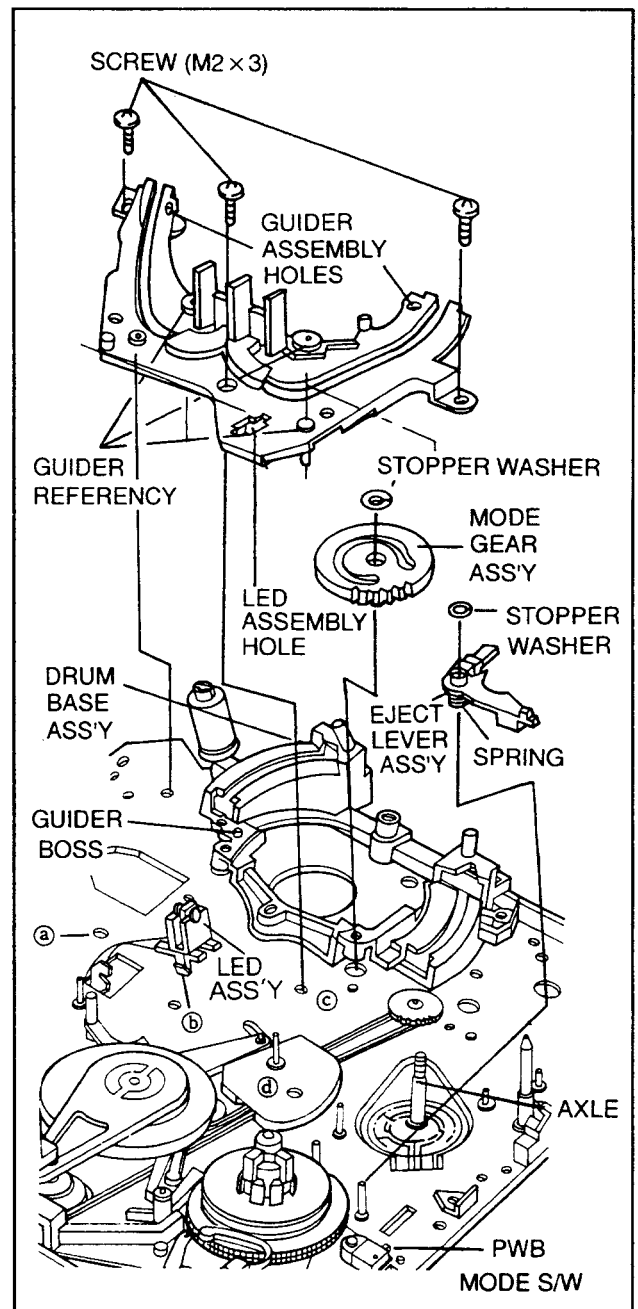

Fig. 4-2-10

10-2. Reassembly (Fig. 4-2-10)

(1) Fix the Guide Basic 4 pins of Loading Basse Ass'y to the refuge holes "ⓐ ", "ⓑ", "ⓒ" and "ⓓ" formed on the upper part of Mechanism Chassis. Stick the Pin into the Gear trace of outer Cam formed on the Cam Gear by pushing the Brake Lever Ass'y slightly in the direction of arrow, and then stick the Guide Basic 4 Pins of Loading Base Ass'y fast to Guide 2 Holes by pressing from above to below. (Fig. A)

(2) Set 3 Screws to "T1", "T2" and "T3" on the upper part of Mechanism Chassis.

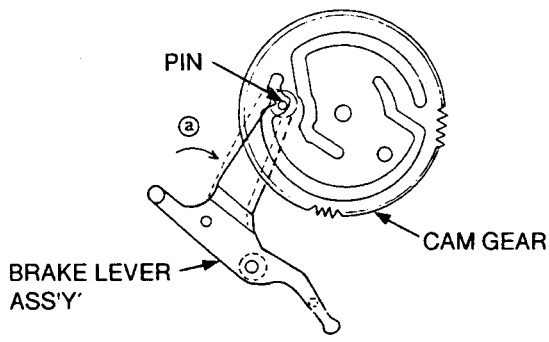

Fig. A
Brake Lever Ass'y and Cam Gear Assembly

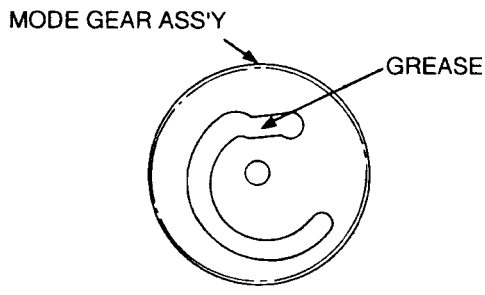

Fig. B

(3) Assemble the Eject Lever Ass'y on the Axle, and Set the Stopper Washer on it.

(4) Wipe the surface of PWB Mode S/W with the cotton stick with the cleanser.

(5) After the cleanser is dried completely, Apply the Grease to the point of contact evenly and thinly.

(6) Apply the Grease on the Mode Gear Ass'y Cam formative parts.

(7) Go in gear the Cam Gear with the Mode Gear Ass'y by sticking on the Axle. (Fig. C)

(Assembly Method)

Go in gear with together so the intaglioed arrow edge to accord on the line connected to the middle of Mode Gear Ass'y and the middle of Cam Gear.

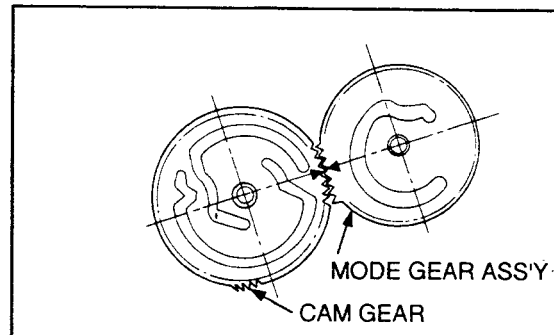

Fig. C

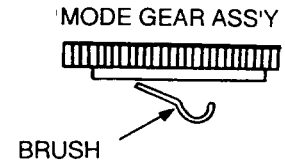

Fig. D

(8) Set the Stopper Washer on the Axle.

(9) Push the Spring Arm point ⓐ of Eject Lever Ass'y from the Spring hanger to below to be supported to the sidewall of CST S/W.

(10) Apply the Grease on the deviant lines of Loading Base Ass'y (Fig. 4-2-11).

(11) Stick the Led Ass'y into the Led Ass'y Hold of Loading Bass Ass'y.

NOTES :

- Use the about 1.2kgf • mm Torque to set 3 Screws.
- Do not force unreasonably, during disassembly and reassembly it may cause the transformation of Gear.
- Be careful so the Roller(S), (T) is not to be dirted by an object material.
- Take the Led Ass'y Hook and Loading Base Ass'y not to be transformed during assembling the Led Ass'y to the Led Ass'y Hole of Loading Base Ass'y.
- Be careful so the Brush on the Lower part is not to be transformed during handling the Mode Gear Ass'y (Fig. D).
- Do not gear in the Mode Gear Ass'y and Cam Gear by force during assembling, the Gear parts may get damaged.
- Take the Spring Arm ⓐ of Eject Lever Ass'y not to be transformed by force.

11. GEAR LOADING ASS'Y(S), (T), SLANT BASE ASS'Y(S), (T), CAM GEAR AND LEVER DRIVE ASS'Y

11-1. Disassembly (Fig. 4-2-11-1, 4-2-11-2)

(1) Turn the Loading Base Ass'y over, and remove the part ⓐ of stopper Plate from Pin "D" by raising and then remove the Stopper Plate by Pushing and raising to "A" direction (to above). (Fig. 4-2-11-1)
(2) Remove the Lever Drive Ass'y from Pin "D" on the Loading Base Sub Ass'y.
(3) Turn the Cam Gear to the "L"direction to stop the rotating. At this time the Slant Base Ass'y(S), (T) also move forward because the Loading Gear Ass'y(S), (T) is rotated (Fig. 4-2-11-3).
(4) Remove the Loading Gear Ass'y(S) and Slant Base Ass'y(S) from the pin "C" on the Loading Base Sub Ass'y.
(5) Remove the Stopper Washer of Loading Gear Ass'y and disassemble the Slant Base Ass'y(S).
(6) Remove the Loading Gear Ass'y(T) and and Slant Base Ass'y(T) from the pin "B" on the Loading Base Sub Ass'y.
(7) Remove the Stopper Washer of Loading Gear Ass'y(T) and disassemble the Slant Base Ass'y (T).
(8) Remove the Stopper Washer from the pin "A" on the Loading Base Sub Ass'y and disassemble the Cam Gear.

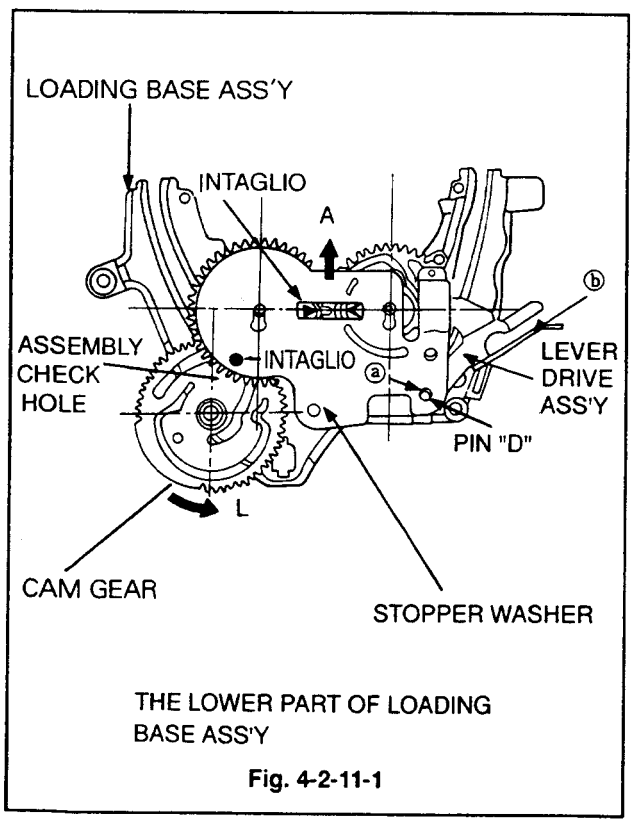

Fig. 4-2-11-1

11-2. Reassembly (Fig. 4-2-11-1, 4-2-11-2)

(1) Apply the Oil 1/2 drop on the pin "A" of Loading Base Sub Ass'y. (Fig. 4-2-11-2)
(2) Apply the Grease on the deviant lines of Cam Gear. (Fig. A)
(3) Stick the Cam Gear in the pin "A" of Loading Base Sub Ass'y adn then set the Stopper Washer.
(4) Stick the Slant Base Ass'y(T) and the set theStopper Washer.
(5) Assemble the Cam Gear and Loadilng Gear Ass'y by going in gear together.

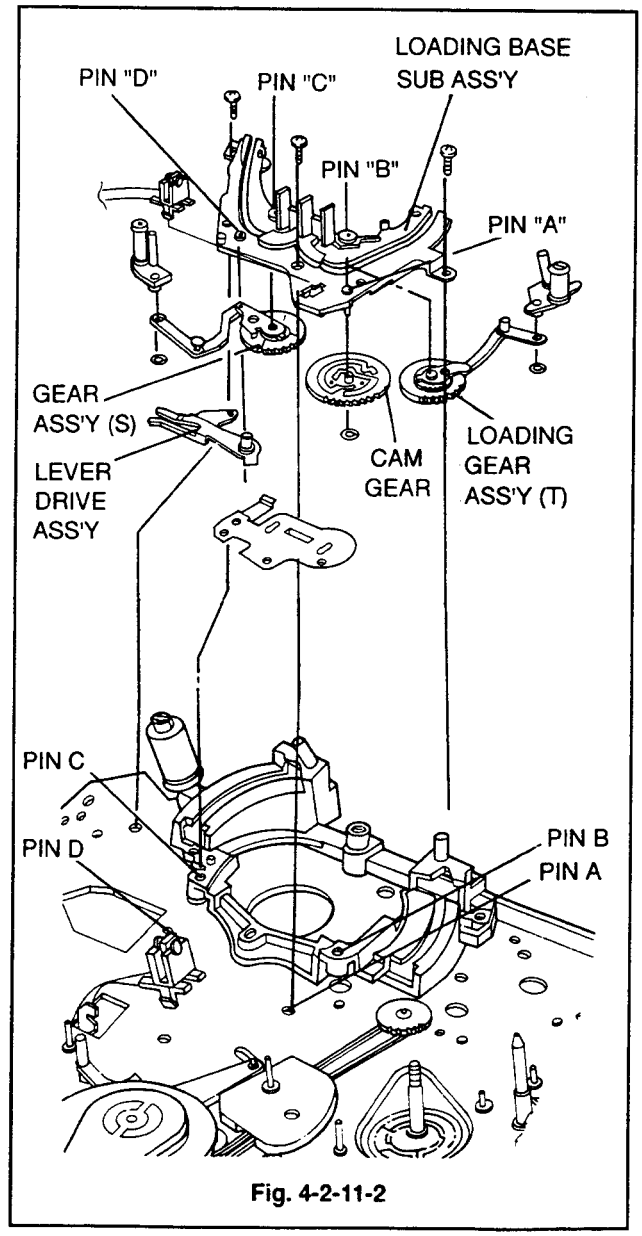

Fig. 4-2-11-2

(Assembly Method)
Apply the Oil 1/2 drop to the Pin "B". Accord the "assembly basic Hole", on the part unformed the teeth pattern by turning the Cam Gear, with the Guider Hole "E" forned on the Loading Base Sub Ass'y.
Fix the Loading Gear Ass'y(T) in the Pin "B". Accord the Guider Hole "F" in the center of cam Gear and Loading Cam Gear.
In the state, fix the little Gear(A) Teeth in the Cam Gear by pushing the Loading Gear Ass'y(T) from the Upside to the lower. (Fig. 2-11-3). And Check the Guider Hole "G" of Loading Gear Ass'y(T) is placed in the straight line between Pin "B" and Pin "C".

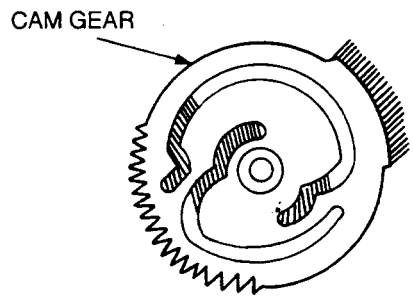

Fig. A

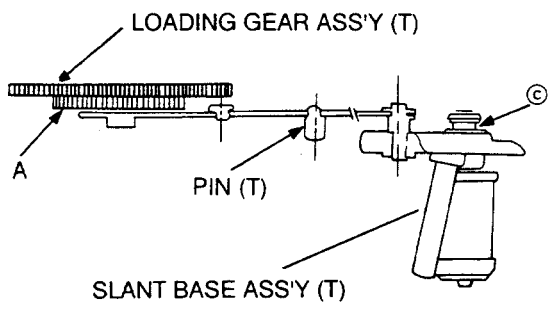

Fig. B

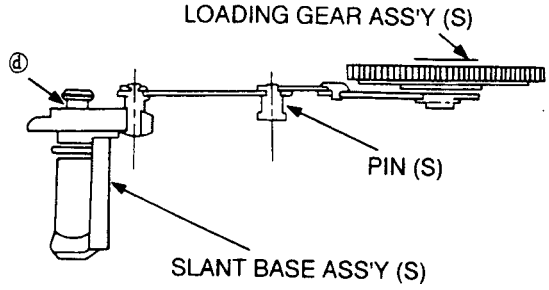

Fig. C

(6) Stick the Pin "T" head of Loading Gear Ass'y(T) in the Guide Way "A" of Loading Base Sub Ass'y. (Fig. 4-2-11-3)
(7) Stick the Slant Base Ass'y(S) in the Lever Hold of Loading Gear Ass'y(S) and Set the Stopper Washer. (Fig. 4-2-11-2)
(8) Apply the Oil 1/2 drop in the Pin "C" of Loading Base Sub Ass'y. (Fig. 4-2-11-2). Go in gear the teeth of Loading Gear Ass'y(S) with the teeth of Loading Gear Ass'y(T).

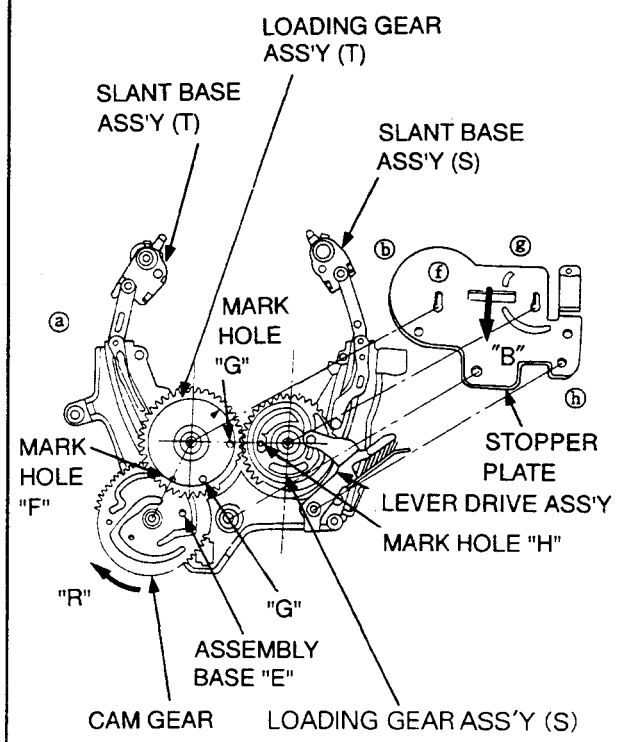

Fig. 4-2-11-3

(Assembly Method)
Fix the Loading Gear Ass'y(S) in the Pin "C" and check the Guide Hole "H" is placed in the straght line between Pin "B" and Pin "C", After Assembly, Pin "B", Guider Hole "G", Guider Hole "H" and Pin "C" are placed on the straight line. (Fig. 4-2-11-3)

(9) Stick the Pin(S) Head of Loading Gear Ass'y(S) in the Guide Way "B" of Loading Base Sub Ass'y. (Fig. 4-2-11-3)
(10) Rotate the Cam Gear to the direction of "R" Stick the part "C" of Slant Base Ass'y(T) and part "D" of Slant Base Ass'y(S) in the Guide Way "A" and "B" of Loading Base Sub Ass'y and then rotate the Cam Gear to the direction of "R" until the rotaty is stopped.
(11) Apply the Grease on the deviant Lines of Cam trace formed on the Gear. (Fig. D)
(12) Apply the Oil 1/2 drop in the Pin "D" of Loading Base Sub Ass'y. (Fig. 4-2-11-3)
(13) During sticking the Lever Drive Ass'y in the Pin "D" of Loading Base Sub Ass'y, stick the Pin "L" of Lever Drive Ass'y in the inside of Cam trace on the Loading Gear(S). (Fig. D, part "E")
(14) Apply the Grease on the deviant Lines of Lever Drive Ass'y. (Fig. 4-2-11-3)
(15) Set the Stopper Plate
(16) Turn the Loading Base Ass'y over, and apply the Grease to the deviant lines of the upper part on the Guide Way.

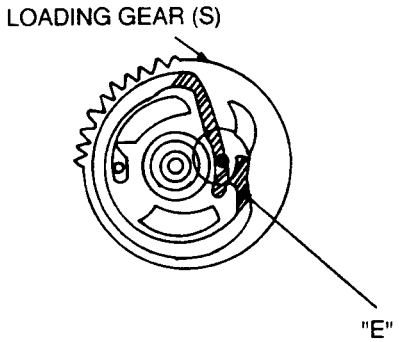

Fig. D

(CHECKING) (Fig. 4-2-11-1)
- Check the Vertical hem of Loading Gear Ass'y(T) negative mark "D" and Loading Gear Ass'y(S) positive mark " " are accorded with each other.
- Check the stopper Plate Guider Hole "I" and Loading Gear Ass'y(T) negative mark "G" are accorded with each other.
- During the checking, if the wrong result is found, adjust the steps above again.

NOTES :
- During the Gears assembly, be careful of the Teeth of Gears get demaged by force.
- Do not force them umreasonably to disassembly and assembly.
- During the Slant and Base Ass'y(C), (T) disassembly and assembly, be careful of the obstruction adhere to the Roller and Post.

12. DRUM BASE ASS'Y AND INERTIA ROLLER ASS'Y

12-1. Disassembly (Fig. 4-2-12) (Fig. A)
(1) Remove 3 Screws and ever remove Drum Base Ass'y.
(2) Remove the Nut.
(3) Remove the Slide Washer, Roller, Sleeve, Lower Flange and Spring.

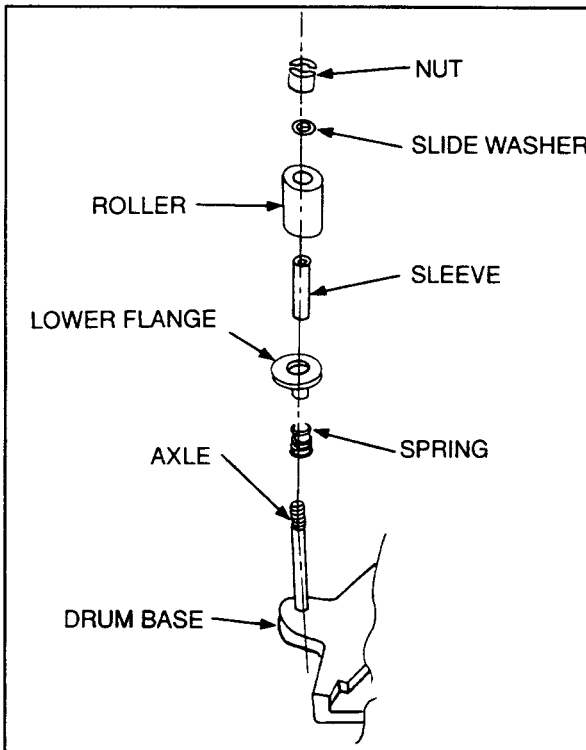

Fig. A

12-2. Reassembly (Fig. 4-2-12) (Fig. A)

(1) Install the Spring, Lower Flange, Sleeve, Roller and Slide Washer on the Axle of Drum Base.
(2) Fix the Axle by rotating the Nut four or six times.
(3) Stick the Guide Bosses 2 point of Drum Base Ass'y in the Boss refuge Holes on the upper part of the Mechanism Chassis from above to below.
(4) Set 3 Screws to fix the Drum Base Ass'y.

NOTES :

- Use the about 2kgf • cm Torque to set Screw.
- Be careful so the Roller surface is not to be dirted during disassembly and assembly.

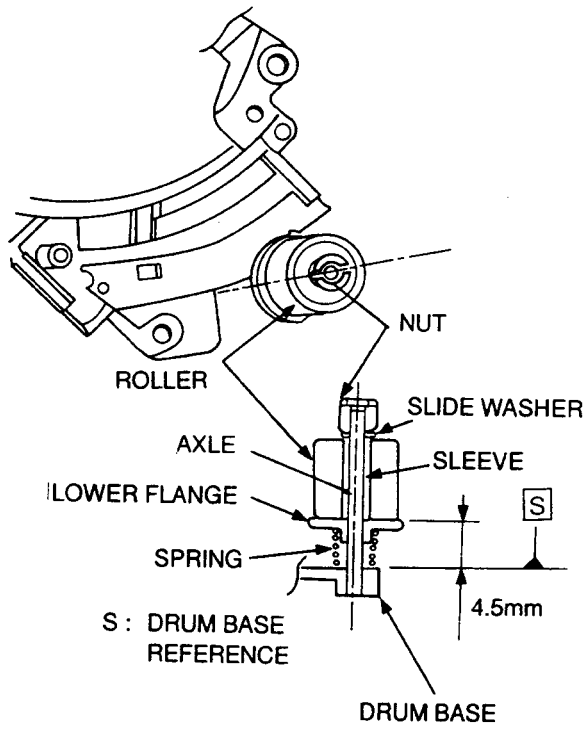

Fig. B

12-3. Roller Height Adjustment (Fig. B)

(1) Adjust the height of Drum Base Lower Side and Lower Frange upper Side by rotating the Nut.

NOTE :

- Readjust the Tape Path after adjustment.

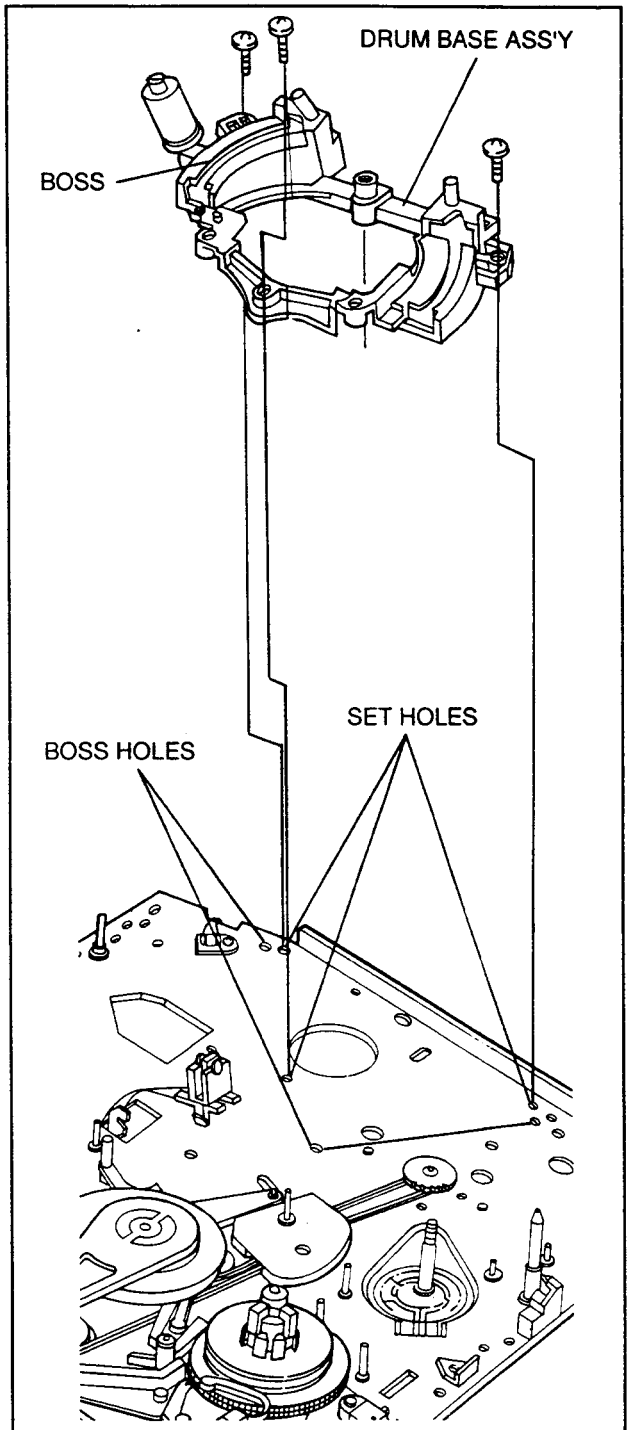

Fig. 4-2-12

13. BRAKE CLUTCH, REEL ASS'Y(S), REEL ASS'Y(T), SENSOR BRACKET, IDLER GEAR ASS'Y AND CAM SPACER

13-1. Disassembly (Fig. 4-2-13)

(1) Remove the Stopper Washer and remove the Brake Clutch.
(2) Remove the Stopper Washer and remove the Slide Washer after disassembly the Reel Ass'y (T).
(3) Remove the Reel Ass'y(S) and then remove the Slide Washer.
(4) Remove the Screw ⓐ and Sensor Bracket.
(5) Disassemble the Idler Gear Ass'y and remove Slide Washer.
(6) Remove the Cam spacer.

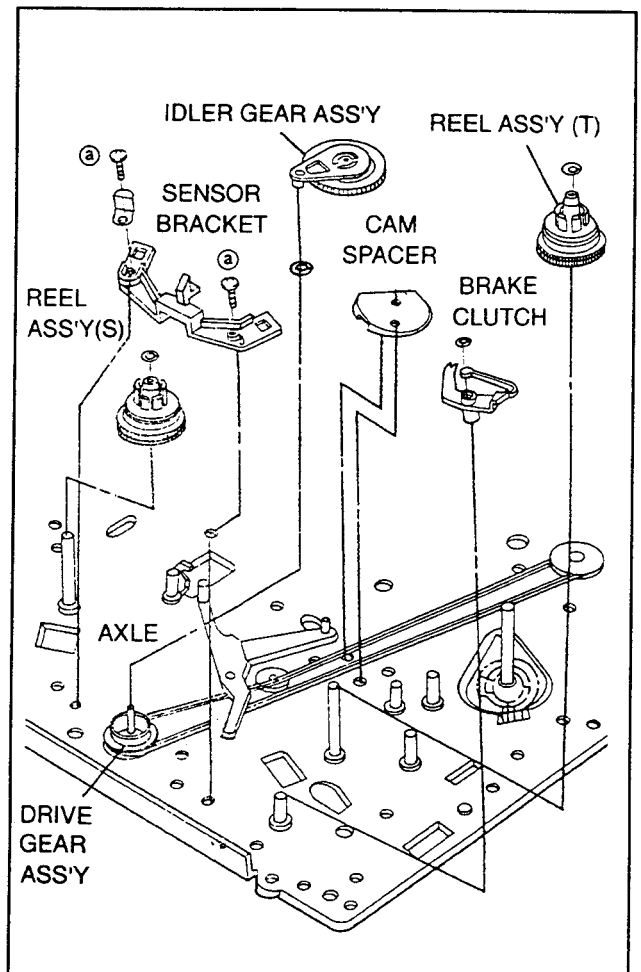

Fig. 4-2-13

13-2. Reassembly (Fig. 4-2-13)

(1) Stick the Guide Bosses 2 point of Cam Spacer in the Guider Bosses 2 point on the upper part of the Mechanism Chassis in the bottom of the Chassis by pushing from above to helow.
(2) Stick the Slide Washer on the Axle and then apply the Oil 1/2 drop and assemble the Idler Gear Ass'y on the Axle. (FIg. A).
During assembling the Idler Gear Ass'y, go in gear the idler Gear teeth with Gear teeth on the upper part of Drive Gear Ass'y.
(3) Stick the Guide Boss 2 point of Sensor Bracket in the Guide Holes 2 point on the upper part of Mechanism Chassis and set right part with Screw.
(4) Push the Spring Arm ⓐ of Brake Reel Ass'y to be supported to the side wall of Sensor Bracket.
(5) Stick the Slide Washer on the Axle and apply the Oil 1/2 drop to the Axle and assemble the Reel Ass'y (S). (Fig. B)
(6) Stick the Slide Washer on the Axle and apply the Oil 1/2 drop to the Axle and assemble the Reel Ass'y(T). (Fig. B)
⇒ Assemble the Reel Ass'y(T) carefully and go in gear the Brake Reel Ass'y teeth with Reel Ass'y (T) teeth by rotating the Lever Brake Ass'y to the direction of "R".
(7) Set the Stopper Washer on the Axle.
(8) Set the Brake Clutch and then the Stopper Washer on the Axle.
⇒ Assemble the bow of Brake Clutch to be Supported to the Side wall of Reel Ass'y(T).

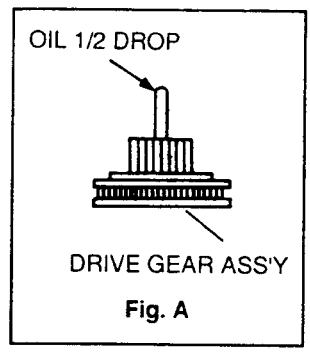

Fig. A

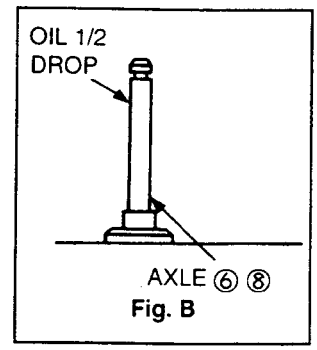

Fig. B

NOTES :

- Be careful so the bow of Brake Clutch is not to be transformed.
- Do not enguage with the Gears by forces, because the Idler Gear is easy to get demaged during the Idler Gear Ass'y.
- Be careful so the teeth is not to get demaged during assembling the Brake Reel Ass'y and Reel Ass'y(T).
- Do not force the Spring Arm unreafonably during the disassembly and reassembly of Spring Arm on the Brake Reel Ass'y, it may cause the transformation of Spring.
- Use the about 1.2kgf • cm Torque to set Screw.

14. BRAKE REEL ASS'Y, LEVER BRAKE ASS'Y, TIMING BELT, IDLER BELT, DRIVE GEAR ASS'Y, CONVERSION GEAR ASS'Y

14-1. Disassembly (Fig. 4-2-14)

(1) Remove the Stopper Washer and remove the Brake Reel Ass'y.
(2) Remove the Timing Belt. Release the Timing Belt stuck in the Idler Belt and then remove the Timing Belt from the Drive Gear Ass'y.
(3) Loosen the Stopper Washer, and remove the Idler Belt and Slide Washer.
(4) Remove the Drive Gear Ass'y and Slide Washer on the Axle.
(5) Loosen the Stopper Washer, and remove the Conversion Gear Ass'y and Slide Washer.

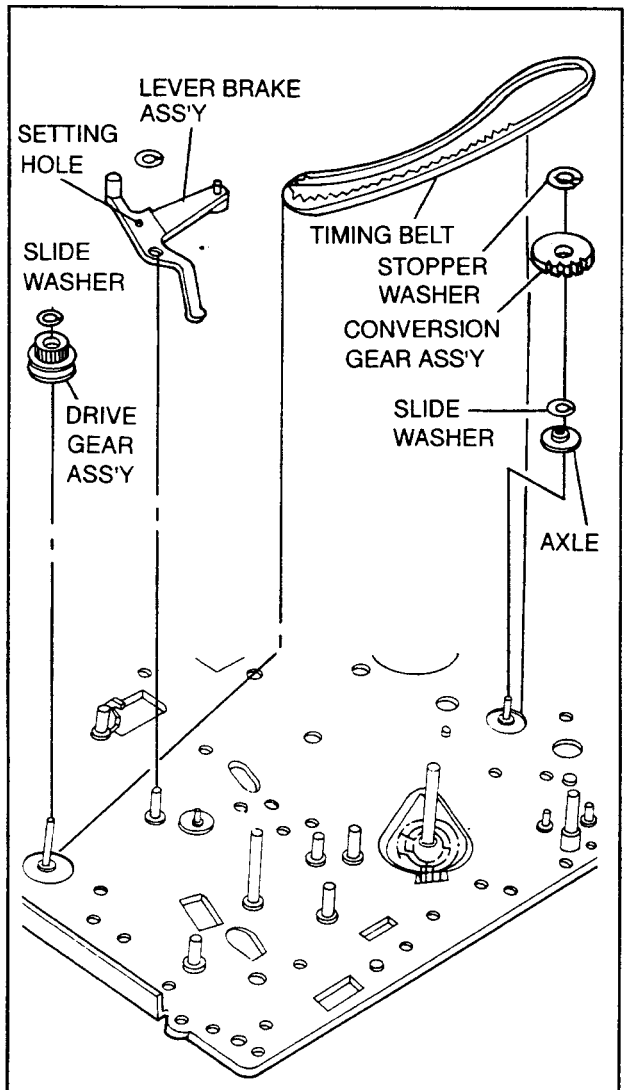

Fig. 4-2-14

14-2. Reaseembly (Fig. 4-2-14)

(1) Stick the slide washer on the Axle and apply the oil 1/2 drop on the Axle. (Fig A)
(2) Assemble the conversion Gear Ass'y on the Axle and set the stop washer.
(3) Assemble the slide wahser on the Axle and apply the oil 1/2 drop on the Axle. (Fig B)
(4) Assemble the Grive Gear Ass'y on the Axle.
(5) Stick the Idler Belt on the Axle and apply the oil 1/2 drop on the Axle.
(6) Assemble the Idler Belt on the Axle and set the stopper wahser.
(7) Assemble the Timing Belt. Hook the Timing Belt on the lower Gear of Conversion Gear Ass'y and assemble the vertical port(no teeth part) on the lower teeth part of Drive Gear Ass'y by hooking on the vertical part of IdlerBelt. (Fig. 4-2-13)
Apply the oil on the teeth of Timing Belt.
(8) Assemble the Lever Brake Ass'y on the Axle and set the stopper washer, and then fit the Guider Hole to the cognition hole by rotating the Lever Brake Ass'y.
(9) Stick the Lever Brake, on the Axle and set the Stopper Washer, At this time, assemble so the part "B" on the Lever Brake Ass'y is to be inserted in the Mouth part "A" on the Brake Reel Ass'y. (Fig. 4-2-13)

NOTE :
Do not force to be transformed unreasonably during the Timing Belt disassembly/assemly.

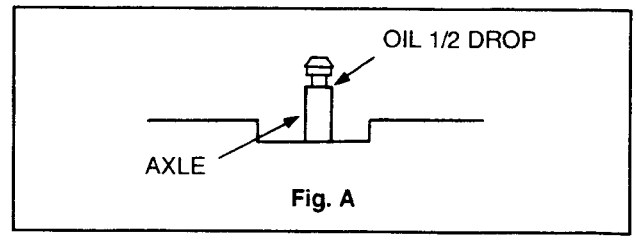

Fig. A

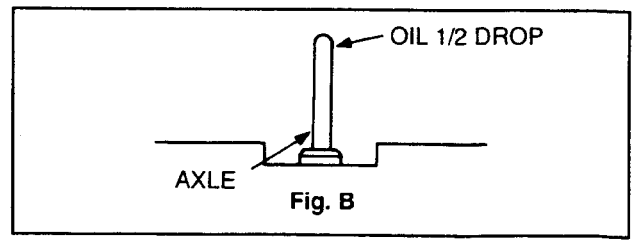

Fig. B

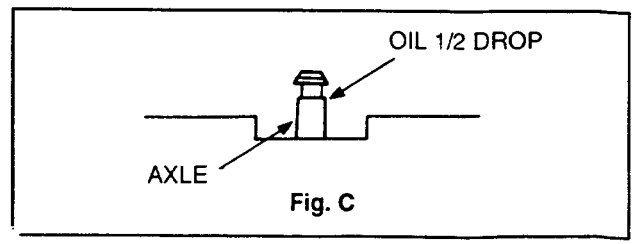

Fig. C

15. DRUM ASS'Y DISASSEMBLY

15-1. Disassembly

(1) Set the Unit to the ULC Mode (Unloading mode).
(2) Remove the Flexible Board and connector.
(3) Loosen the 3 screws on the Lower part of Chassis and remove the Drum Ass'y from the Drum Base Ass'y.

15-2. Reassembly

(1) Fit 2 Guider Bosses formed on the Drum Base Ass'y with the Guider refuge Holde on the Lower part of Drum Ass'y, and then set the Drum Ass'y with 3 screws through the Guide Hole of Drum Base Ass'y on the Lower Part of chassis.
(2) Link the connector to the Flexible Board.

NOTES :

- During the Flexible Board and connector disassembly/assembly, be careful to the Line Cutting or transformation.
- Do not touch the Head Tip.
- Readjust the Tape path of ter assembly.
- Use the about 2kgf • cm Torgue to set screw.

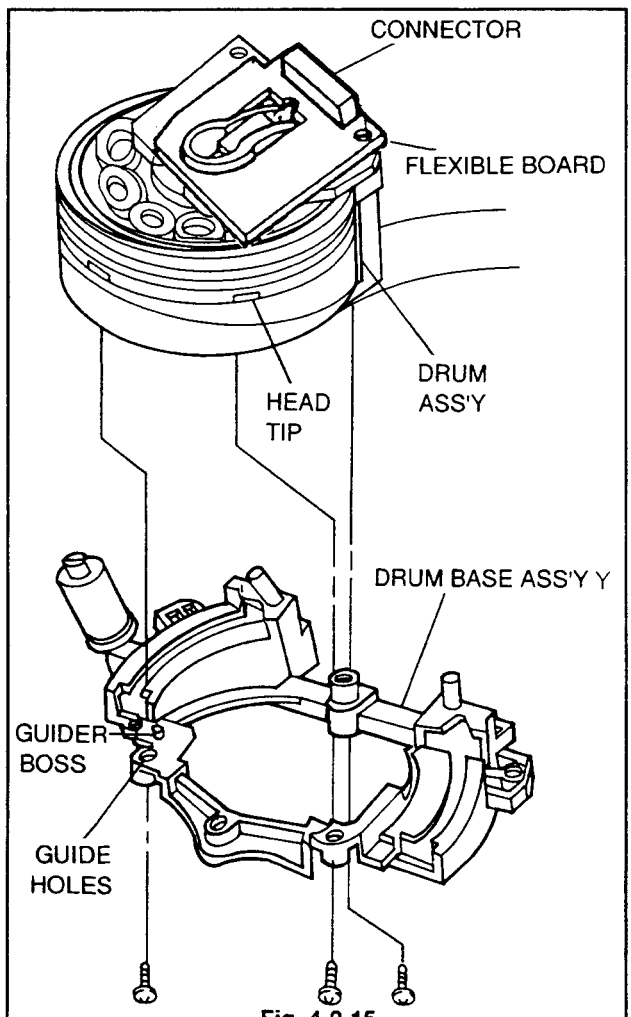

Fig. 4-2-15

16. DRUM DISASSEMBLY

16-1. Disassembly

(1) Loosen 2Screws on the upper part of Drum Ass'y and remove the Motor Ass'y stator.
(2) Remove the lead from the soldering part on the Lower part of Drum Ass'y, and remove the Plate Signal by loosening 1 Screw.
(3) Remove the lead from the PWB Ass'y signal soldering part on the Lower part of Drum Ass'y and remove PWB Ass'y signal.

16-2. Reassembly

(1) Assemble the Drum to fit the PWB Ass'y signal Hole and the Drum Sub Ass'y pin properly, and solder on the soldering part of PWB Ass'y signal.
(2) Assemble the Plate Signal Ground on the Drum Sub Ass'y with 1 screw, an then Solder on the soldery part of Plate signal Ground.
(3) Assemble the Motor Ass'y Stator in the Bracket Stator Hole with 2 screws on the upper part of Drum Sub Ass'y.

NOTES :

- During the parts assembly, do not scratch on the surface of Drum.
- Be careful so the Video Head is not to be damaged.
- Solder carefully after assembling the PWB Ass'y Signal.
- Use the about 2kgf • cm Torgue to set screw.

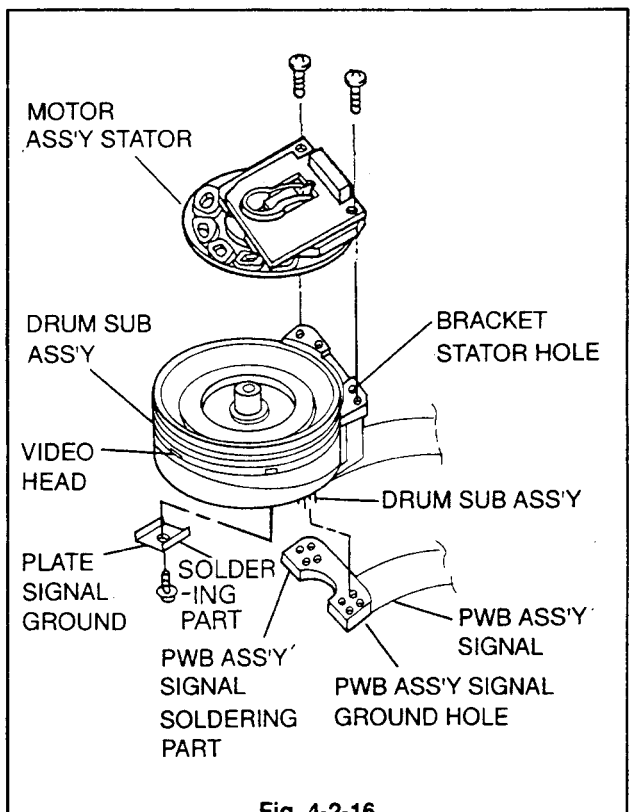

Fig. 4-2-16

17. PCB ASS'Y DECK

17-1. Disasembly

(1) Remove 1 screw (4) and 1 screws (5) on the upper parts of chassis.
(2) Remove the Holder PRE-AMP 8 mm, BRACKET DECK 8mm after release, screw (6) and screw (7).
(3) Remove 3 screw (8) and remove the solder of Mode switch, LED.
(4) Remove the PCB ASS'Y DECK JUNTION.

17-2. Reassembly

Perform the reassembly to the reverse order of assembly above.

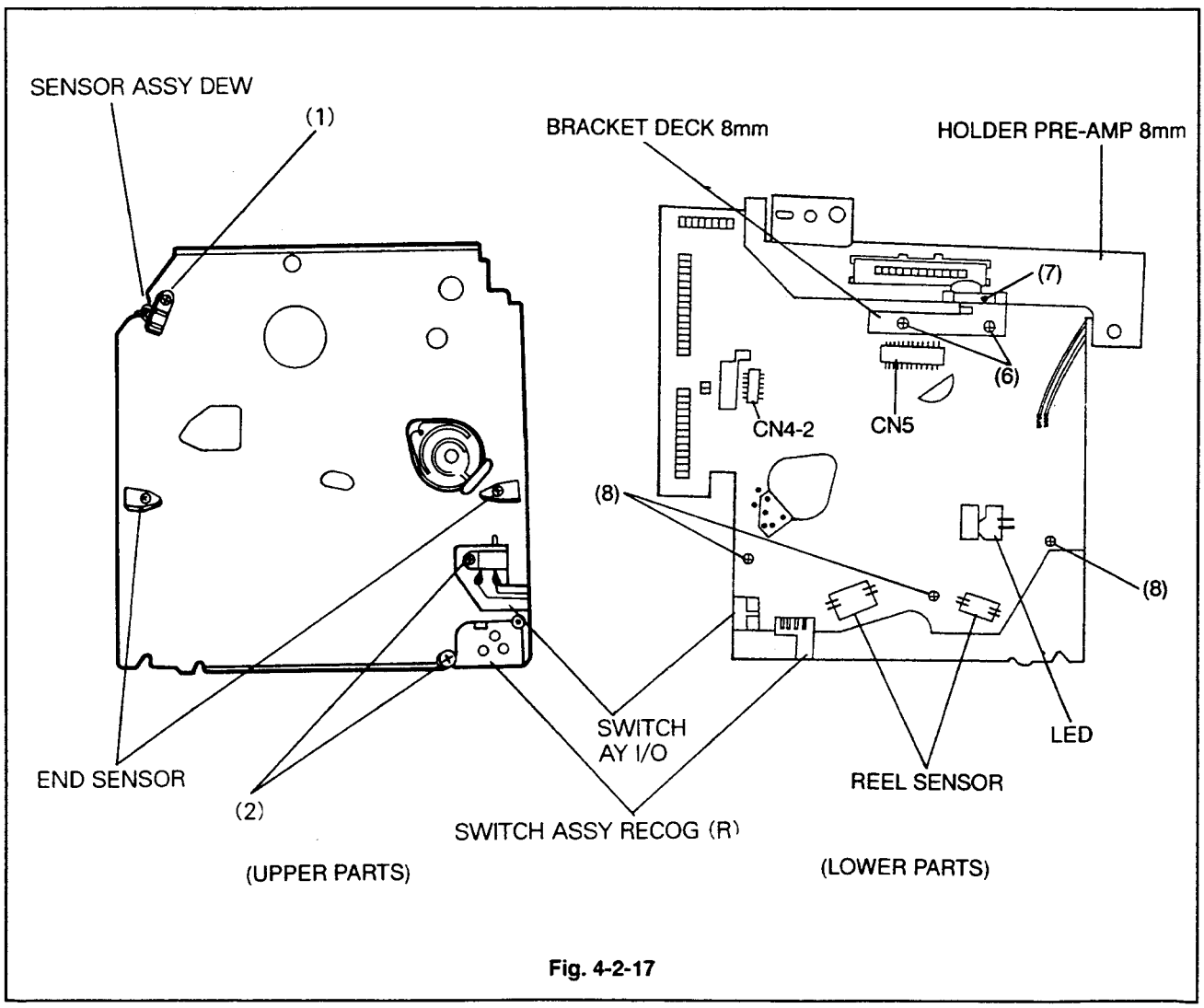

Fig. 4-2-17

DECK MECHANISM ADJUSTMENT

1. DECK LOADING SYSTEM LAY-OUT

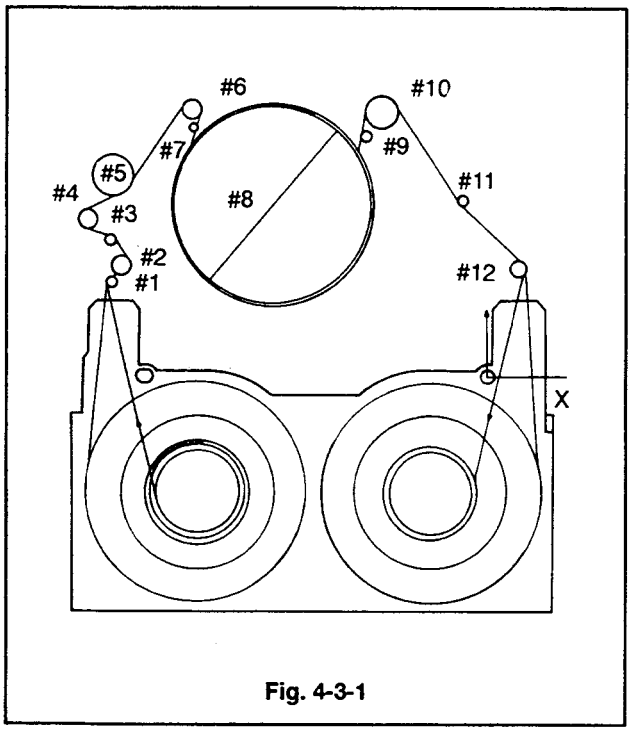

Fig. 4-3-1

#1 : TENSION POST (Φ2)

#2 : GUIDE ROLLER (N) (Φ4)

#3 : SLANT POST (Φ2)

#4 : GUIDE ROLLER (Φ4)

#5 : INERTIA ROLLER (=P1) (Φ8)

#6 : GUIDE ROLLER (S) (=P2) (Φ4)

#7 : SLANT POST (S) (Φ2)

#8 : DRUM (Φ40)

#9 : SLANT POST (T) (Φ2)

#10 : GUIDE ROLLER (T) (=P3) (Φ6)

#11 : CAPSTAN (Φ1.995)

#12 : TAKE UP GUIDE (=P4) (Φ3)

2. PREPARATIONS

① Cleaning water.
② Chanois cloth.
③ Cotton stick
④ Dental mirror.
⑤ Torgue CST Tape, Alignment Tape and PLAY/RECORDING Tape.
⑥ Hexagonal Wrench(0.89mm) or L-Wrench.
⑦ Small(-) Driver⇒P1, P4 Adjustment.
⑧ Loading adjustment stick⇒P2, P3, P4 adjustment.
⑨ Circuit jig for Deck adjustment.

3. LOADING POST FIRST HEIGHT ADJUSTMENT

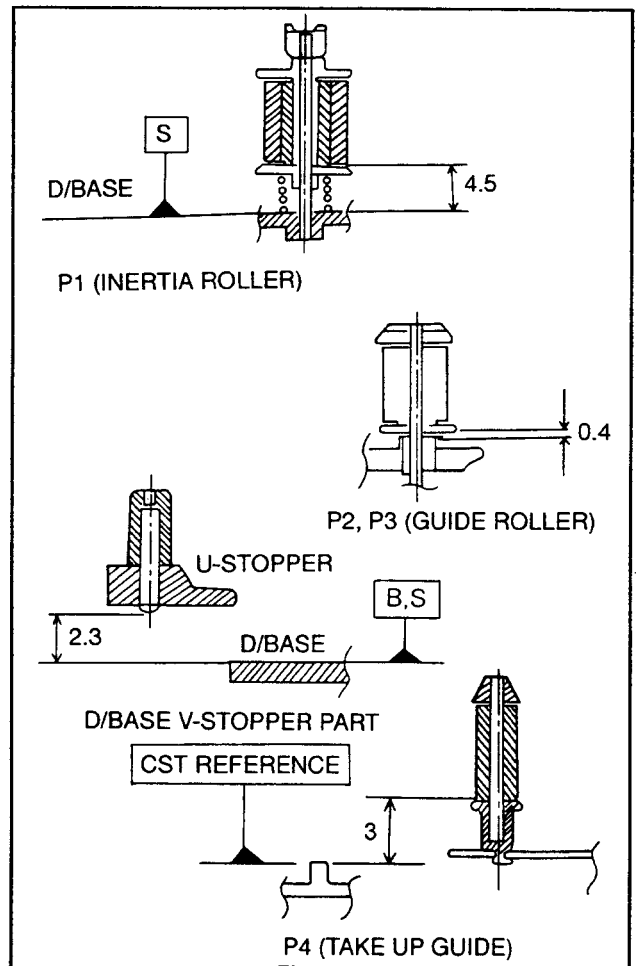

Fig. 4-3-2

4. TENTION ARM POSITION AND BACK TENTION ADJUSTMENT

4-1. Tension Arm position Adjustment

(1) Set the Deck mechanism to the Ope-Mode in No Tape state ⇒using the Circuit Fixture.
(2) Check the gab between Ø3 Boss of Arm Slant Roller and Cap of Arm Tension is 0.5~1.0 mm. If the gab is over the range, adjust as follows.
(3) Remove the screw on the Bracket fixing the Band Ass'y.
(4) Set the Bracket to the desired position by pushing to the direction of A or B and then set the screw.

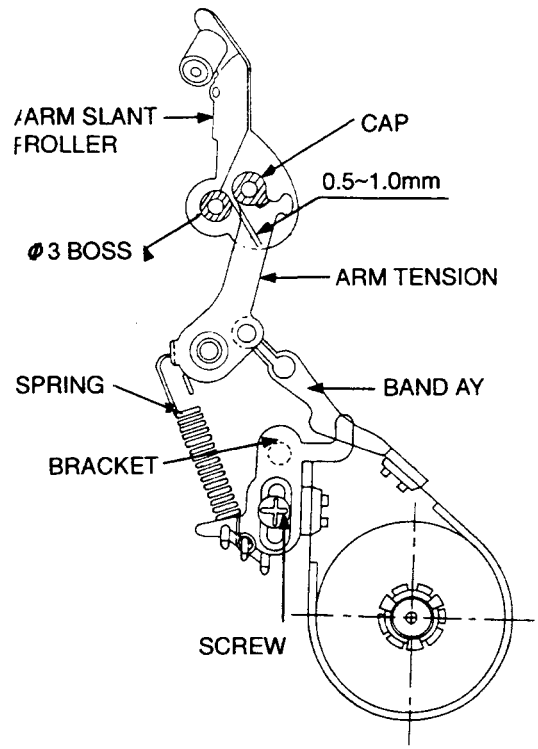

Fig. 4-3-3

4-2. Back Tension Adjustment

(1) After step 4-1 Adjustment, insert the Torgue CST Tape in the Unit and set to the Ope-Mode.
(2) Check the Back Tension Torgue of Supply side is in 6.5±2 (gf-cm).
(3) If the measuring value is more than the range, hook the spring of Bracket to (c), and if the value is less than hook to (D).
(4) Check the Back Tension is in the range by performing the Step 1) and 2) repeatedly.

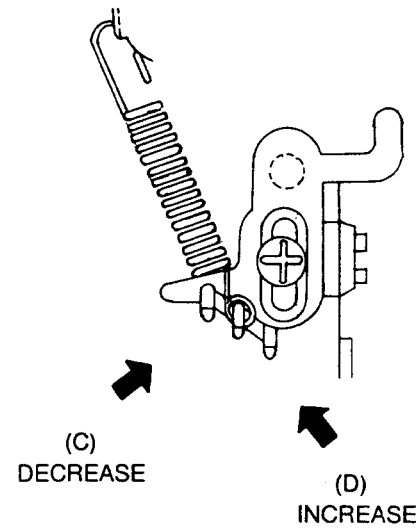

Fig. 4-3-4

1-5. REEL TORQUE CHECK

Inset the Torque CST Tape in the unit and check the spec as follows;

MODE	UNIT	SPEC	REMARKS
OPC CUE	gr · cm	12.5±4	At T/up Reel
REVERSE		35±6	At Supply Reel
REVIEW		12.5±4	At T/up Reel

6. TAPE PATH ADJUSTMENT

The 8mm Video can control the Tape speed instantaneously using the pilot signal, and adjusst very correctly using the ATF(Automatic Track Finding) method, so the adjustment by Tracking control knob is not need. But in case of ATF method, the Tape Path adjustment is difficult. That is, the perfect adjustment is difficult through the ATF method, because it compensates the Head Tracking Error to extent. Therefore, select the Track shift Mode for is possible and the Tracking control is easy. NOTE for P4 Guide (# 12) .

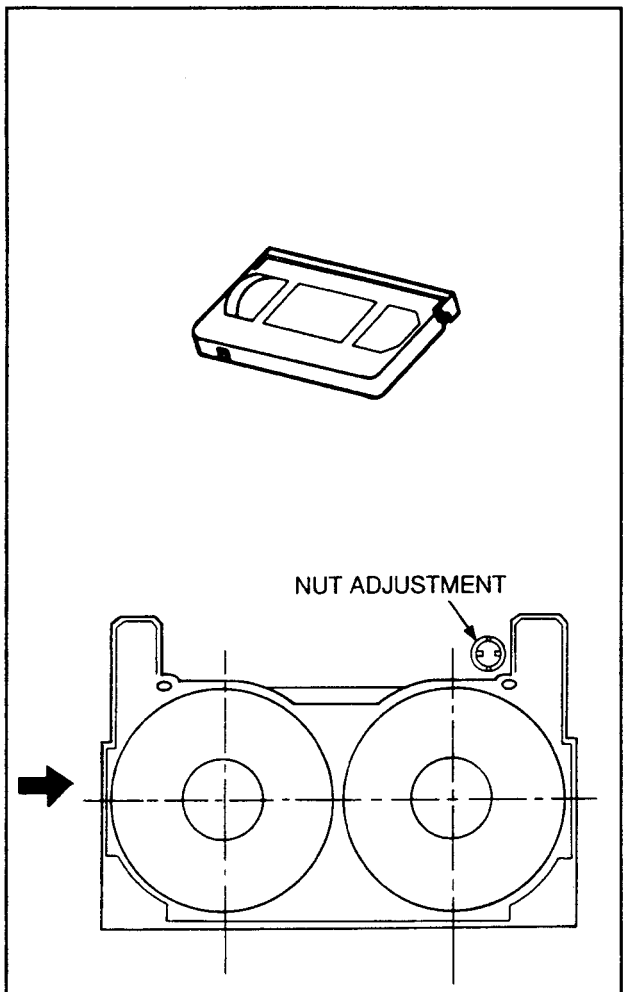

Fig. 4-3-5

6-1. Adjustment preparation

(1) Wipe the Tape path. (Tape Guides, Drum, Capstan Shaft, Pinch Rollor)
(2) Set the oiscilloscope for the Waveform Output.
(3) Play Back the alignment Tape for Tracking control.
(4) Chck the RF Waveform of Oscilloscope in the Entrance/Exit is flat Otherwise, adjust as follows;

• WAVEFORM

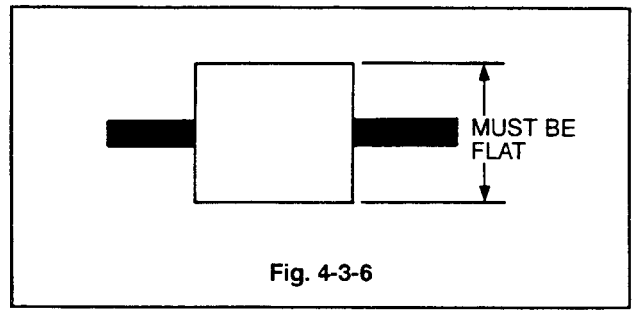

Fig. 4-3-6

6-2. Tracking Control

(1) Playback the Aligment Tape for Tacking contrl.
(2) Using the Running Control stick, rotate the P2-Guide so the waveform of entrance side is to be flatted.
(3) Using the Running control stick, ortate the P3-Guide so the waveform of exit side is to be flatted.

6-3. Tracking Fine Adjustment

(1) Playback the Alignment Tape for Tracking control and set the unit to the Track shift mode.
(2) Check the waveform is flat. Otherwise, roate the P2-Guide and P3-Guide so it is to be flatted.
(3) Set the Lock screw of P2 side using the Hexaponal Wrench 4 L-Wrench, etc. At this time, check the entrance of waveform is not change.
(4) Set the Lock Screw in the P3 side using the hexaponal Wrench 4 L-Wrench, etc. At this time, check the exit side of waveform is not changed.

• WAVEFORM

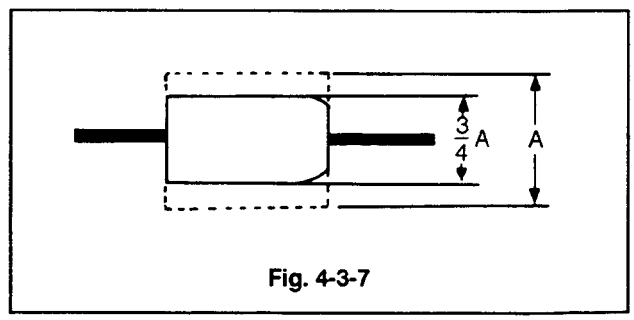

Fig. 4-3-7

6-4. P1-Guide (Inertia Roller) Adjustment

(1) Playback the P6-120MP Tape, and then set the unit to REV Mode.
(2) Check the distortion is occurred in the Lower Flange of P1-Guide. If it appears, bring the Cap of P1-Guide a lower by rotating it to the clockwise with the driver until the tape is flatted.
(3) Playback the Alignment tape for the Tracking control.
(4) Perform the Tracking Control and Tracking Fine Control.
(5) In the Track Shift state, playback the tape again after CUE/REV. At this time, check the RF Waveform is stabled horizontality in 2secs.
(6) If not, rotate the cap of P1-Guide to an angle of 90 degrees of counter-clockwise and then perform step 5 again.

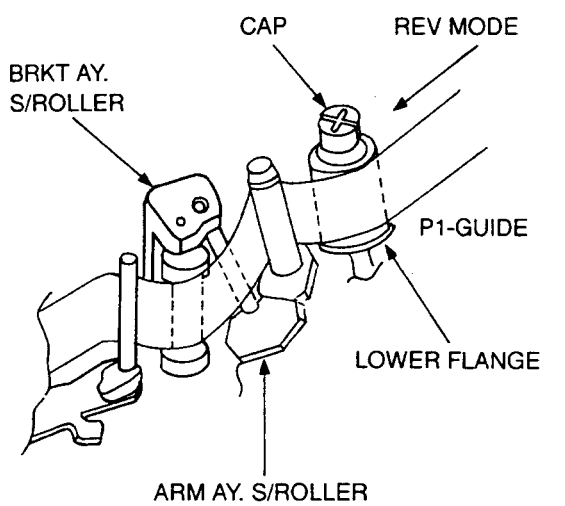

Fig. 4-3-8

NOTES :

① Repeat Step(5),(6) until the normal waveform ranged is become. At this time, if the RF waveform is changed, perform the Track Fine adjustment of Entrance side and then repeat step(5) again.
② Druing FF/REW Mode, check the Curl or Tape Jam are occurred on the # 4 Guide Roller Upper/Lower Flange of Bracket AY, S/Roller.

• WAVEFORM

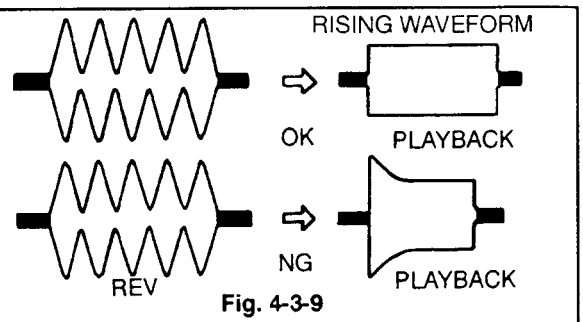

Fig. 4-3-9

6-5. P4-Guide(T/Up Guide) Adjustment

(1) Playback the Alignment Tape for Tracking control and set the unit to the REV-Mode.
(2) Check the Tape transformation is not occurred between the P3-Guide and Capstan Shaft. If it occurrs, rotate the P4-Guide Height Adjustment Cap until the Tape transformation is ridded.
(3) Set the unit to the playback Mode, and then check the Tape transformation is not occurred between the Capstan shaft and P4-Guide(within 0.5mm) If the Tape transformation is more than 0.4mm, adjust the P4-Guide Height unil it is become within 0.5mm.

NOTES :

- When the unit is set to the REV*Mode. it is good adjustment that the transformation between P3-Guide and Capstan Shaft is appeard within 0. 3mm.
- The Upper/Lower Tape Tension distribution in the P2,P3-Guide must be as follows;

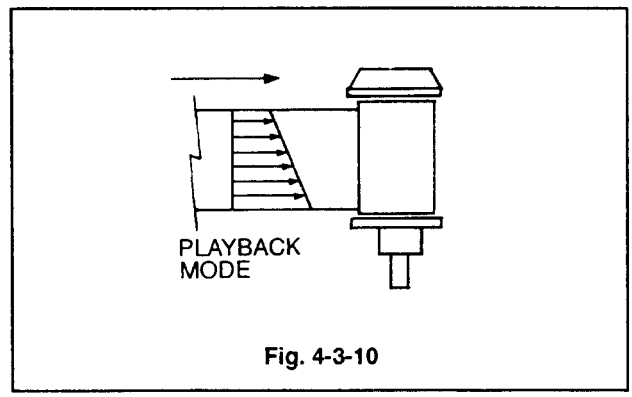

Fig. 4-3-10

6-6. CUE/REV Waveform check

(1) Playback the Alignment Tape for Tracking control and then set the unit to the REV Mode. Check the top of each waveform is sustained with the regular width of 5 or more than 5. Otherwise, perform Item 6-3.
(2) Set the unit to the CUE-Mode. Check otherwise, perform Item 6-3.

• WAVEFORM

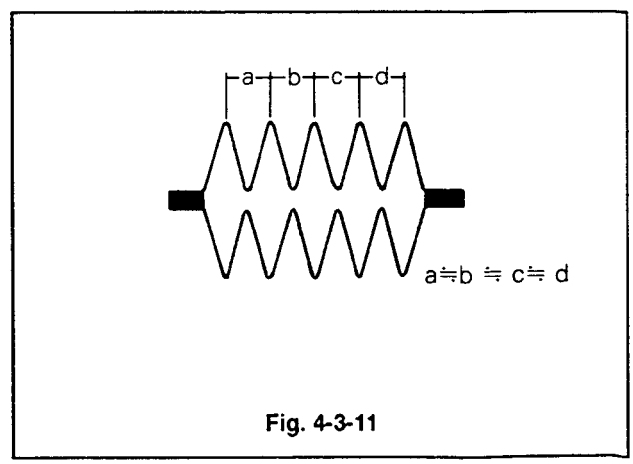

Fig. 4-3-11

6-7. Check after Adjustment

(1) Tracking Check

1) Check the width of RF Wavefrom is reduced to about 3/4 when do the unit set to the Track Shift position.

• WAVEFORM

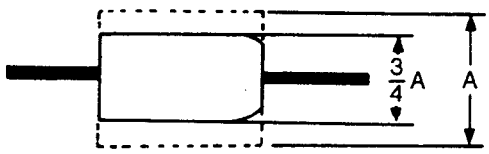

Fig. 4-3-12

2) Check the Minimum width (Emin) is the 65% of Maximum Width (Emax) or more than 65%.

• WAVEFORM

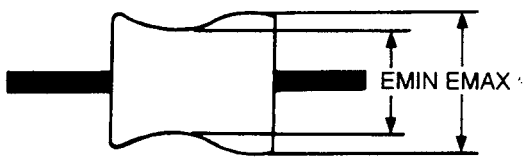

Fig. 4-3-13

3) Check the Waveform is not changed greatly.

(2) Rising Check

1) Playback an Alignment Tape for Tracking Control.

• WAVEFORM

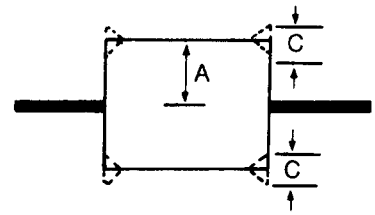

Fig. 4-3-14

2) Release the Tracking Shift State.
3) Unload the tape and load again.
4) Set the Unit to the PLAY mode and check the RF Waveform is stabilized within 2 Secs, horizontally, Also, check the tape is distorted around the Pinch Roller.
5) Set the Unit to the CUE/REV and FF/REW modes and then playing back again, check the RF Waveform is stabilized within 2 Secs, horizontally, Also, check the tape is distorted around the Pinch Roller.
6) Check the process from 3) to 5) repeatedly.

(3) TAPE PATH Adjustment

1) Playback the P_6-120MP (NTSC) or P_5-90MP (PAL) Cassette Tape.
Check the Tape gets on or the Tape folded state is within 0.3mm in the following flanges;
① Upper and Lower Flange of #2 Guide.
② Lower Flange of #5 P1-Guide
③ Upper Flange of #6 P2-Guide
④ Upper Flange of #10 P3-Guide
⑤ Upper and Lower Flange of #12 P4-Guide

2) During Playback Mode, press the FF key to set CUE Mode or press the REW key to set REV Mode, and at this time, check the Tape gets on or the Tape folded state is within 0. 3mm in the following flages.

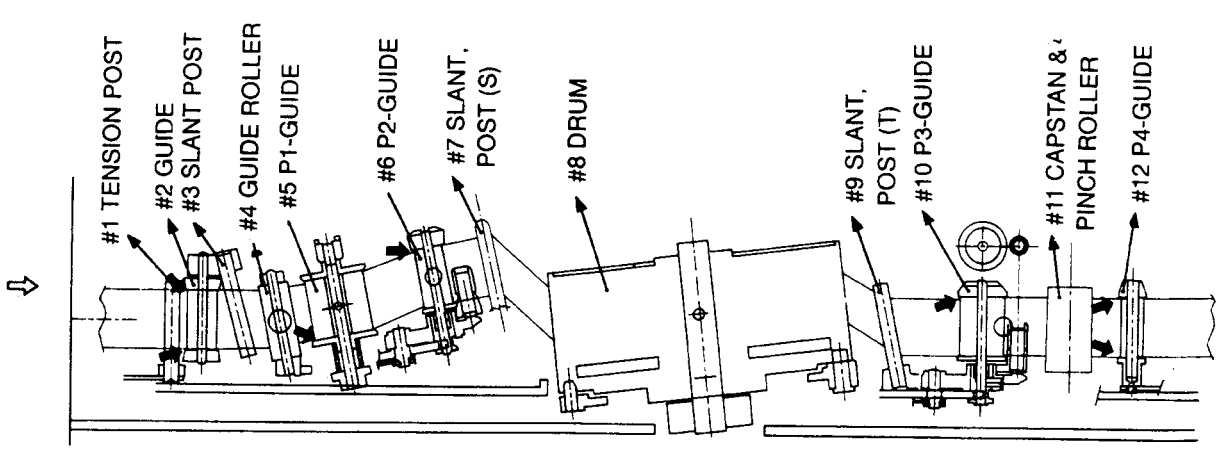

Fig. 4-3-15

4. EXPLODED VIEW

4-1. CASSETTE HOUSING SECTION

NOTE) 1) Refer to "SECTION 5 REPLACEMENT PARTS LIST" in order to look for the part number of each part.

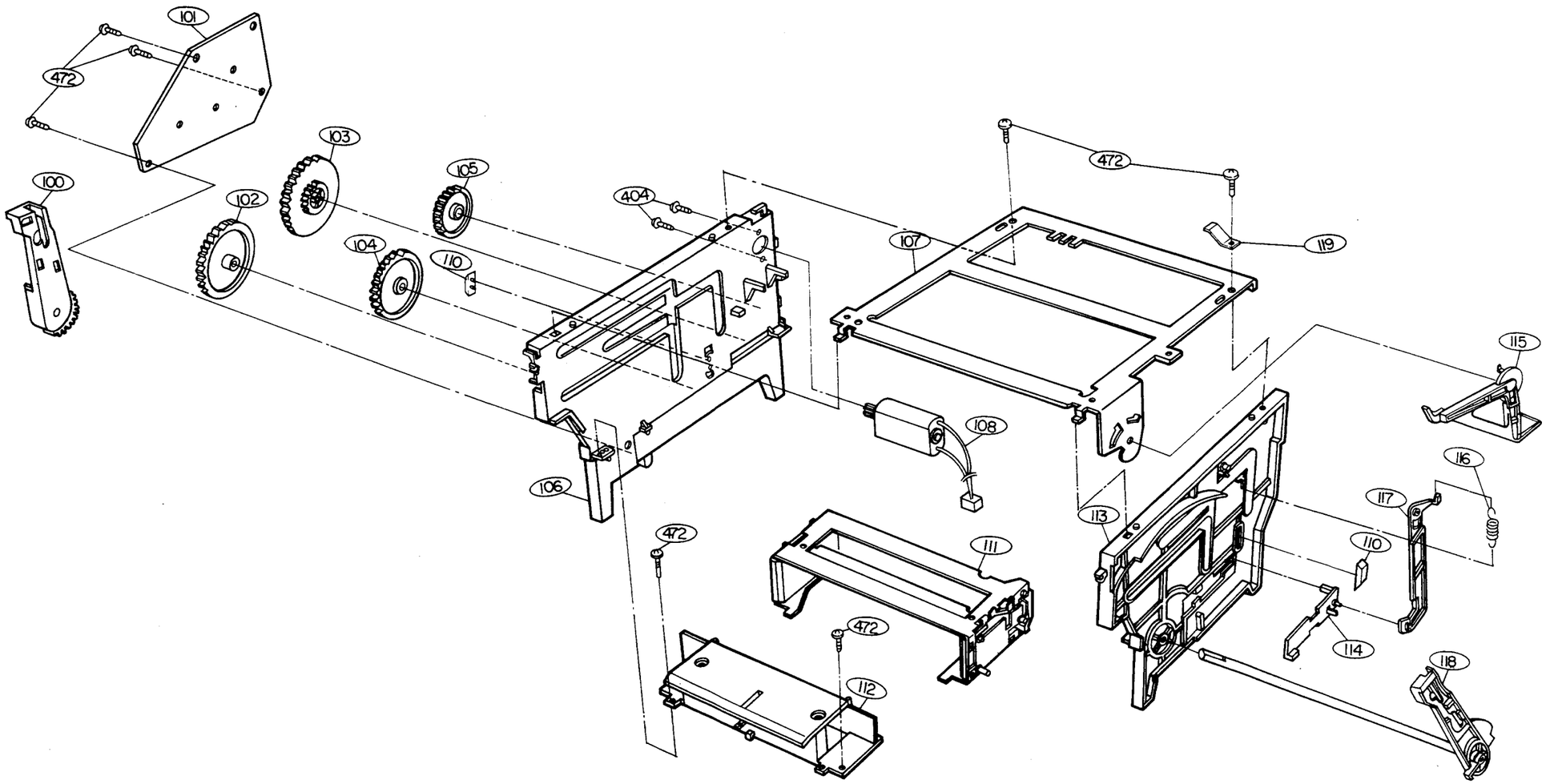

4-2. CHASSIS MECHANISM SECTION

NOTE) 1) Refer to "SECTION 5 REPLACEMENT PARTS LIST" in order to look for the part number of each part.

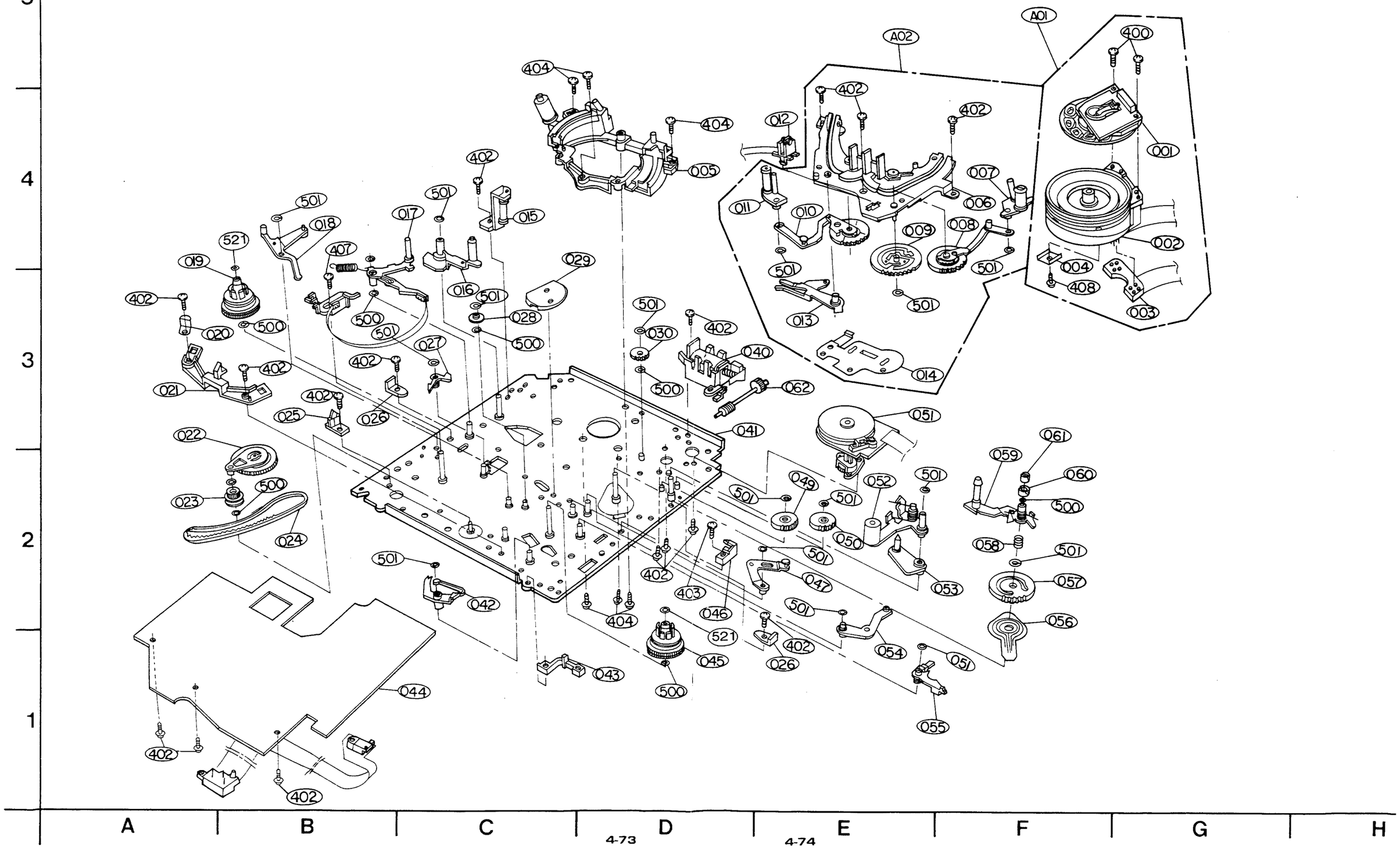

SECTION 5 REPLACEMENT PARTS LIST

1. Mechanical Section

RUN DATE : 95.09.27
NSP: Not Service Part

1-1. VHS Mechanism

S	AL	LOCA.NO	PART NO(GS)	DESCRIPTION	SPECIFICATION	REMARKS
				ASSEMBLY PARTS SECTION		
		A00	412-127C	DECK	ASSY D-17'S (7HD SI VCR PAL)	
	OR	A00	412C127C	DECK	ASSY D-17'S (7HD SI VCR PAL)	
	OR	A00	412G127C	DECK	ASSY D-17'S (7HD SI VCR PAL)	
	OR	A00	412H127C	DECK	ASSY D-17'S (7HD SI VCR PAL)	
	OR	A00	412W127C	DECK	ASSY D-17'S (7HD SI VCR PAL)	
		A01	413-184D	DRUM	ASSY (D17-7CH PAL) DD2	
		A02	386-296C	ARM	ASSY CL	
	OR	A03	311-005G	CHASSIS ASSY'	D17	NSP
		A03	311-005M	CHASSIS ASSY'	D17	NSP
		A04	456-048A	REEL	ASSY SUPPLY POM 7G	
		A05	456-045A	REEL	ASSY T/UP POM 7G	
		A06	321-397D	BRACKET	ASSY F/R	
		A07	225-228A	BASE	ASSY A/C	
	OR	A08	225-248A	BASE	ASSY,P2	
		A08	225-248B	BASE	ASSY P2 (W-W)	
	OR	A09	225-249A	BASE	ASSY,P3	
		A09	225-249B	BASE	ASSY P3 (W-W)	
		A10	414-104A	MOTOR	ASSY LOAD	
		A11	333-209E	LEVER	ASSY PINCH	
		A20	321-401A	BRACKET	ASSY BOTTOM	
		A21	333-208A	LEVER	ASSY RAT	
		A22	338-078A	BRAKE	ASSY CAP	
		A23	386-218A	ARM	ASSY LOAD(R)	
		A24	386-219A	ARM	ASSY LOAD(L)	
		A25	511-997D	PWB ASSY!	D-17,VCR	
	OR	A30	219-017F	HOUSING	ASSY (D17)	
		A30	219-017L	HOUSING	ASSY (D17)	
		A32	435-257B	GEAR	ASSY DRIVE (HOOK ADDED)	
		A33	321-406A	BRACKET	ASSY CARRIER	
		A34	321-441A	BRACKET	ASSY SIDE	
		A35	515-106B	PWB ASSY!	SENSOR	
				PARTS SECTION		
		001	413-182D	DRUM	ASSY UPPER (D-17 7CH PAL)	
		002	413-183A	DRUM	ASSY LOWER (7CH)	
		005	225-231B	BASE	ASSY D-BRUSH	
	OR	006	225-220A	BASE	DRUM	NSP
	OR	006	225-220C	BASE	DRUM (Y-H)	NSP
		006	225-296A	BASE	ASSY DRUM (HI-FI)	NSP
		007	386-297A	ARM	SUB ASSY CU	
		008	442-460B	SPRING	CU	
		010	386-295B	ARM	CL	
		012	384-071A	GUIDE	17	
		013	523-082B	HEAD	FE,HVFHF0010AK	
	OR	013	523-824A	HEAD	F.E MH-131G (D-17)	
		014	378-017A	SLEEVE	P1	
		015	434-178A	ROLLER	P1	
	OR	015	434-178B	ROLLER	P1	

S	AL	LOCA.NO	PART NO(GS)	DESCRIPTION	SPECIFICATION	REMARKS
		016	389-003B	ADJUST	P(4)	
		017	434-244A	ROLLER	ASSY INERTIA	NSP
		018	386-205A	ARM	ASSY TENSION	
		019	442-331C	SPRING	TENSION	
		020	328-052B	BAND	ASSY TENSION	
		021	334-066A	STOPPER	P1	
		027	435-243A	GEAR	IDLE A POM 3G	
		028	435-244A	GEAR	IDLE B POM 3G	
		029	456-040A	REEL	T17	NSP
		030	442-341A	SPRING	REEL	NSP
		031	276-068A	CAP	REEL	NSP
		032	456-039A	REEL	S17	NSP
		036	435-240A	GEAR	F/R POM 3G	
		037	442-336A	SPRING	UP/D	NSP
		038	435-239A	GEAR	UP/D POM 3G	NSP
		040	333-201B	LEVER	ASSY F/R	NSP
		044	442-338B	SPRING	SSB	NSP
		045	338-081A	BRAKE	S-SOFT	NSP
		046	442-337A	SPRING	SMB	NSP
		047	338-080A	BRAKE	ASSY S-MAIN	NSP
		048	442-339D	SPRING	TSB	NSP
		049	338-083A	BRAKE	ASSY T-SOFT	NSP
		050	321-396A	BRACKET	SUB ASSY F/R	NSP
		054	389-013A	ADJUST	X-ASSY	
		056	378-018A	SLEEVE	P4	
		060	442-343A	SPRING	T/UP	
		061	386-387B	ARM	ASSY T/UP	
		065	442-332A	SPRING	A/C	
		066	225-219A	BASE	SUB ASSY A/C	NSP
		068	523-089A	HEAD	SUB ASSY A/C	
		069	442-362A	SPRING	AZIMUTH	
		070	338-085A	BRAKE	ASSY T-MAIN	
		071	442-344A	SPRING	TMB	
		074	434-173A	ROLLER	ASSY GUIDE	
	OR	074	434-173C	ROLLER	ASSY GUIDE	
		075	353-054B	SCREW	MINIATURE	
		076	225-226B	BASE	SUB ASSY SLALT (L,W-W)	
		077	225-225B	BASE	SUB ASSY SLALT (R,W-W)	
		081	414-105A	MOTOR	SUB ASSY,L	
		082	437-009A	WORM	ASSY	
		083	321-410A	BRACKET	SUB ASSY L/M	
		084	433-023A	WHEEL	WORM	
		087	321-470A	BRACKET	ASSY DEW	
		088	435-448A	GEAR	PINCH (N)	
		090	442-347A	SPRING	PINCH	NSP
		091	386-210A	ARM	ASSY PINCH	NSP
		092	442-346A	SPRING	STOPPER	NSP
		093	334-050C	STOPPER	PINCH	NSP
	OR	094	434-181A	ROLLER	ASSY PINCH	
		094	434-181B	ROLLER	PINCH D14 X L18	
		095	276-089B	CAP	PINCH	NSP
		096	333-203A	LEVER	PINCH	NSP
		098	333-344A	LEVER	T-UP (N)	
		100	321-463A	BRACKET	SUB ASSY B	NSP
		102	435-249A	GEAR	RAT1	NSP

S	AL	LOCA.NO	PART NO(GS)	DESCRIPTION	SPECIFICATION	REMARKS
		103	442-356A	SPRING	F-LEVER	NSP
		104	356-208A	PIN	F-LEVER	NSP
		106	442-345A	SPRING	RAT	NSP
		107	333-202A	LEVER	RAT	NSP
		108	333-207A	LEVER	F17	NSP
		110	374-005A	CAM	D17 POM 10G	
		111	435-318A	GEAR	ASSY RACK F/L	
		112	435-291A	GEAR	ASSY RACK T	
		113	435-246A	GEAR	PC POM 3G	
		114	414-121B	MOTOR	CAPSTAN, GVC017S	
		115	452-047A	BELT	CENTER D71.9 X SQRT2.0	
		116	256-734A	PLATE	F17	
		117	442-342B	SPRING	FP	
		120	338-089A	BRAKE	SUB ASSY CAP	
		121	442-333A	SPRING	CAPSTAN	
		122	432-038A	PULLEY	GEAR POM 3G	
		130	337-005A	CLUTCH	ASSY POM 7G FELT 20X1X1T 2EA	
		131	340-001A	HOLDER	LED (Q)	
		132	324-642A	HOLDER	R/S	
		133	513-494D	PWB	JUNCTION D-17 VCR	NSP
		134	556-133A	SWITCH	MODE	
	OR	134	556-133B	SWITCH	MODE; ALPS	
	OR	135	0DL451000AA	DIODE LED	IR SENSOR GL451(LONG) SHARP	
		135	0DL550000AB	DIODE LED	IR SENSOR EL-55L(LONG) KOC	
		136	657-102K	SENSOR	SG-105(REEL) D-16 KOC	
		137	556-131A	SWITCH	ESE-105SV1	
		138	435-234A	GEAR	LOAD(R)	
		139	442-330A	SPRING	LOADING	
		140	386-274A	ARM	SUB ASSY (R)	
		142	435-235A	GEAR	LOAD(L)	
		143	442-330B	SPRING	LOADING	
		144	386-273A	ARM	SUB ASSY (L)	
		146	333-218A	LEVER	ASSY A-TEN	
		150	321-527A	BRACKET	ASSY C-GUIDE	
		201	256-934B	PLATE	TOP	
		204	465-026A	OPENER	DOOR	
		205	321-517B	BRACKET	LEFT (D17)	
		206	321-518A	BRACKET	RIGHT (D17)	
		207	435-278A	GEAR	RACK N/D	
		208	256-910A	PLATE	GND TOP	
		210	321-440A	BRACKET	SIDE	
		213	442-351A	SPRING	OC	NSP
		214	465-028A	OPENER	CST	NSP
		215	442-357A	SPRING	RID	NSP
		216	465-027A	OPENER	RID	NSP
		217	324-647A	HOLDER	R	NSP
		218	321-407A	BRACKET	SUPPORT	NSP
		219	321-405A	BRACKET	CARRIER	NSP
		220	324-646A	HOLDER	L	NSP
		221	333-210A	LEVER	DT	NSP
		222	442-358B	SPRING	DT	NSP
		225	384-074A	GUIDE	CST	
		226	442-352A	SPRING	L	NSP
		227	435-254A	GEAR	L	NSP
		228	442-350A	SPRING	S/W	

RUN DATE : 95.09.27
NSP: Not Service Part

S	AL	LOCA.NO	PART NO(GS)	DESCRIPTION	SPECIFICATION	REMARKS
		229	333-204A	LEVER	S/W	NSP
		230	423-368A	SHAFT	D	NSP
		231	442-353A	SPRING	R	NSP
		232	435-255A	GEAR	R	NSP
		233	435-256B	GEAR	C (HOOK ADDED)	NSP
		234	442-359C	SPRING	CUSHION (D17F/L)	NSP
		235	442-354A	SPRING	CC	NSP
		236	276-086A	CAP	DRIVE	NSP
				SCREW		
		400	1MDC0302418	PAN HEAD MACHINE SCREW P/WASH+	D 3.0 L 8.0 MSWR3/FZY	
		401	1MPK0261418	PAN HEAD MACHINE SCREW +,-	D 2.6 L 4.0 MSWR3/FZY	
		402	353-021D	SCREW	SPECIAL	
		404	353-048D	SCREW	CONE POINT 3X8	
		408	1MBC0302418	BINDING HEAD MACHINE SCREW +	D 3.0 L 8.0 MSWR3/FZY	
		411	353-046B	SCREW	SPECIAL (3X8 FZMY)	
		412	1MBC0302818	BINDING HEAD MACHINE SCREW +	D 3.0 L 12 MSWR3/FZY	
		421	1MPC0302618	PAN HEAD MACHINE SCREW +!	D3.0 L10.0,MSWR3/FZY	
		422	1MPC0302418	PAN HEAD MACHINE SCREW +!	D 3.0 L 8.0 MSWR3/FZY	
		425	1SRF0302418	BRAIZER HD TAP TITE SCREW +	D 3.0 L 8.0 MSWR3/FZY	
		426	1MPC0302018	PAN HEAD MACHINE SCREW +!	D 3.0 L 6.0 MSWR3/FZY	
				NUT, WASHER		
		503	354-020E	WASHER	STOPPER	
		504	354-001B	WASHER	P.S D3.1XD6X0.5T	
		505	354-080E	WASHER	STOPPER	
		506	352-025A	NUT	NYLON M3	
		507	354-020J	WASHER	STOPPER(2.6X4.8X0.5)	
		508	352-033A	NUT	NUT NYLON(M3)	
		511	354-080C	WASHER	STOPPER D2.6XD5X0.5T	
		512	354-080E	WASHER	STOPPER	NSP
		513	354-080A	WASHER	STOPPER	NSP
		514	354-080B	WASHER	STOPPER	NSP
		516	354-033B	WASHER	STOPPER	

1-2. 8mm Mechanism

RUN DATE : 95.09.27
NSP: Not Service Part

S	AL	LOCA.NO	PART NO(GS)	DESCRIPTION	SPECIFICATION	REMARKS
				ASSEMBLY PARTS SECTION		
		A00	412-133A	DECK	SUB ASSY D-21 (F/L)	
		A01	413-306C	DRUM	ASSY DD3SQ	
		A02	225-282A	BASE	ASSY LOADING	
		A30	219-021A	HOUSING	ASSY F/L (D-21)	
				PARTS SECTION		
		001	414-156C	MOTOR	D-21 STATTOR,DRUM DM-21 DD1P	NSP
		002	413-352B	DRUM	SUB ASSY	
		003	515-655B	PWB ASSY!	DRUM SIGNAL	NSP
		004	255-148A	PLATE	SIGNAL GROUND	
		005	225-279A	BASE	ASSY DRUM	
		006	225-283A	BASE	SUB ASSY LOADING	
		007	225-285A	BASE	ASSY S/POST(T)	
		008	435-329A	GEAR	SUB ASSY LOADING(T)	
		009	435-327A	GEAR	CAM	
		010	435-332A	GEAR	SUB ASSY LOADING(S)	
		011	225-288A	BASE	ASSY S/POST(S)	
		012	657-031A	SENSOR	ASSY LED	
		013	333-264A	LEVER	ASSY DRIVE	
		014	255-058A	PLATE	L/BASE	
		015	321-535A	BRACKET	ASSY SLANT GUIDE	
		016	386-310A	ARM	ASSY SLANT ROLLER	
		017	386-313A	ARM	ASSY TENSION	
		018	333-254A	LEVER	ASSY BRAKE	
		019	375-015A	DISC	ASSY REEL(S)	
		020	222-019A	PROTECTOR	T/BAND	
		021	321-534A	BRACKET	SENSOR	
		022	386-307A	ARM	ASSY IDLER	
		023	435-323A	GEAR	ASSY DRIVE	
		024	452-054A	BELT	REEL DRIVE (YAMAUCHI)	
		025	322-051A	SUPPORTER	CST	
		026	657-032A	SENSOR	ASSY END	
		027	338-093A	BRAKE	ASSY SOFT	
		028	431-028A	IDLER	BELT	
		029	445-005A	SPACER	CAM GEAR	
		030	435-334A	GEAR	ASSY CONVERSION	
		040	414-137B	MOTOR	ASSY LOADING	
		041	313-041B	CHASSIS	ASSY MAIN(F/L)	NSP
		042	338-104A	BRAKE	CLUTCH	
		043	321-533A	BRACKET	RECOG S/W	
		044	515-680A	PWB ASSY!	ASSY JUNCTION	
		045	375-016A	DISC	ASSY REEL(T)	
		046	324-823A	HOLDER	SHAFT	
		047	333-267A	LEVER	ASSY T/UP	
		049	435-321A	GEAR	MIDDLE	
		050	435-348A	GEAR	ASSY TRANSFER	
		051	414-141A	MOTOR	D-21 CAPSTAN MOTOR GSD	
		052	386-319A	ARM	ASSY PINCH	

S	AL	LOCA.NO	PART NO(GS)	DESCRIPTION	SPECIFICATION	REMARKS
		053	333-271A	LEVER	ASSY PINCH	NSP
		054	333-269A	LEVER	ASSY MODE	
		056	504-476A	PWB	MODE S/W	
		057	435-347A	GEAR	ASSY MODE	
		058	442-486A	SPRING	T/UP ARM(C)	
		059	386-316A	ARM	ASSY T/UP	
		060	352-028A	NUT	T/UP ARM(A)	
		061	352-030A	NUT	T/UP ARM(B)	
		062	423-483A	SHAFT	ASSY WORM(L)	
		100	333-323A	LEVER	ASSY LOADING (L)	NSP
		101	257-058A	PLATE	GEAR	
		102	435-399A	GEAR	A	
		103	435-401A	GEAR	C	
		104	435-400A	GEAR	B	
		105	435-402A	GEAR	D	
		106	225-329A	BASE	SIDE (L)	
		107	257-057A	PLATE	SIDE BASE	
		108	414-162A	MOTOR	ASSY HOUSING	
		110	577-014A	PRISM	END SENSOR	
		111	225-332A	BASE	ASSY LOADING	
		112	257-060A	PLATE	ASSY BASE	
		113	225-328A	BASE	SIDE (R)	
		114	333-319A	LEVER	SWITCH	NSP
		115	333-320A	LEVER	DOOR	NSP
		116	442-593A	SPRING	LOCK(L)	
		117	333-318A	LEVER	LOCK	NSP
		118	333-322A	LEVER	ASSY LOADING (R)	NSP
		119	256-889A	PLATE	CGND	
				SCREW		
		400	353-078B	SCREW	MACHINE+2X9	
		401	353-152A	SCREW	PS (M1.7X2)	
		402	353-153A	SCREW	PS (M2X3)	
		403	353-153B	SCREW	PS(M2X4)	
		404	353-153C	SCREW	PS (M2X5)	
		405	353-153D	SCREW	PS (M2X6)	
		407	353-091C	SCREW	SPECIAL M	
		408	1MFU0201418	FLAT HEAD MACHINE SCREW PREC 1	D 2.0 L 4.0 MSWR3/FZY	
				NUT, WASHER		
		500	354-101A	WASHER	SLIDE (1.5TX3.0X0.13)	
		501	354-099A	WASHER	STOP(1.25X3.0X0.25)	
		501	354-099B	WASHER	STOP(1.25X3.0X0.25)	
		502	354-104A	WASHER	STOP (2.2X5.0X0.25)	
		520	354-048E	WASHER	PS+D6XD2.6XT0.5	
		521	354-120A	WASHER	REEL STOP	

2. Cabinet & Main Frame Section

RUN DATE : 95.09.27
NSP: Not Service Part

S	AL	LOCA.NO	PART NO(GS)	DESCRIPTION	SPECIFICATION	REMARKS
				ASSEMBLY PARTS SECTION		
		A40	315-314N	FRAME	ASSY MAIN	NSP
		A41	3501R-0249A	BOARD ASSY	KEYBOARD 2NDDD1S	
		A42	3501R-0248A	BOARD ASSY	TIMER 2NDDD1S	
		A43	258-722K	PANEL	ASSY FRONT	
		A44	3501R-0247B	BOARD ASSY	SMPS	
		A45	501-522A	MODULE	PRE AMP ASSY	
		A46	3501R-0245D	BOARD ASSY	MAIN	
		A47	3501R-0251A	BOARD ASSY	8MM PRE-AMP	
		A48	3501R-0246A	BOARD ASSY	8MM MAIN	
				PARTS SECTION		
		250	217-472C	CASE	TOP	
		251	321-526A	BRACKET	HOUSING	
		260	315-300B	FRAME	MAIN	NSP
		262	257-061A	PLATE	GND (FTZ)	NSP
		263	324-976A	HOLDER	PWB	NSP
		275	324-872A	HOLDER	DIGITRON	
		278	273-116A	KNOB	TRACKING	
		280	258-717E	PANEL	FRONT	NSP
		282	220-075F	COVER	ASSY DOOR	
		283	226-104D	DOOR	CST	
		284	442-469A	SPRING	DOOR	
		288	524-013A	MAGNET	ASSY DOOR	
		289	321-718A	BRACKET	ASSY COVER DOOR	
		290	321-719A	BRACKET	ASSY DAMPER	
		291	435-465B	GEAR	ASSY DAMPER(T;60)	
		300	681-951A	CORD	H03VVH2-F 2X0.75MM LP21R/PE221	
		320	258-596G	PANEL	ASSY DISTRIBUTOR	
		321	257-006A	PLATE	BOTTOM GROUND	
		330	221-834A	COVER	BOTTOM	
		340	226-064J	DOOR	CST 8MM	
		341	442-591A	SPRING	DOOR	
		342	340-088A	HOLDER	ASSY P/AMP 8MM	
				SCREW		
		452	353-046C	SCREW	(3X10 FZMY)	
		452	353-051A	SCREW	SPECIAL(3X10 FZMY)	
		459	353-046C	SCREW	(3X10 FZMY)	
		462	353-136A	SCREW	SPECIAL(4.6X12.5 FBK)	
		472	353-090A	SCREW	SPECIAL TP	

3. Packing Accessory Section

RUN DATE : 95.09.27
NSP: Not Service Part

S	AL	LOCA.NO	PART NO(GS)	DESCRIPTION	SPECIFICATION	REMARKS
		801	480-657D	INSTRUCTION ASSY		
		802	290-371A	BOX CARTON		
		803	283-217A	PACKING		
		804	291-002D	SHEET CUSHION		NSP
		808	534-008C	BATTERY	AAAM(R03) 1.5V 1PAIR(LOCAL)	
		810	861-505J	CABLE SET ASSY	RF-CABLE ASSY PAL FTZ	

4. Remote Control Section

RUN DATE : 95.09.27
NSP: Not Service Part

S	AL	LOCA.NO	PART NO(GS)	DESCRIPTION	SPECIFICATION	REMARKS
		900	597-121E	REMOTE CONTROL	2ND D/DECK ASSY	
		901	236-558A	WINDOW	FILTER	NSP
		902	220-084A	COVER	D/D3 R/C	NSP
		903	217-485J	CASE	TOP	NSP
		904	275-699C	BUTTON	2ND D/DECK	NSP
		905	275-612A	BUTTON	RUBBER VHS (R/C)	NSP
		906	275-611C	BUTTON	RUBBER 8MM	NSP
		907	515-824E	PWB ASSY!	REMOCON	NSP
		908	442-611A	SPRING	COIL (R/C)	NSP
		909	217-486D	CASE	BOTTOM	NSP
		910	221-857D	COVER	BATTERY	
		911	477-054A	RUBBER	BUMPON	NSP

5. Fixture Section

RUN DATE : 95.09.27
NSP: Not Service Part

S	AL	LOCA.NO	PART NO(GS)	DESCRIPTION	SPECIFICATION	REMARKS
		FIX	960-015J	FIXTURE	SVC FIXTURE	
		FIX1	232-972A	BOARD ASSY	SVC FIXTURE	
		FIX2	515-789A	PWB ASSY	FIXTURE	

6. Electrical Section

RUN DATE : 95.09.27

CAUTION: The * marks in the parts list designate components which have special characteristics important for safety and should be replaced only with types identical to those in the original circuit or specified in the parts list. Before replacing any of these components, read carefully the SAFETY PRECAUTIONS and SERVICING PRECAUTIONS in the manual. Do not degrade the safety of the unit through improper servicing.

Tolerance

Symbol	C	J	K	M	N	Z	P	A
%	±2	±5	±10	±20	±30	+80 -20	+100 -10	+100 -10

CC, CJ, CK: Capacitor, Ceramic
CE: Capacitor, Electrolytic
CQ: Capacitor, Polyester

S	AL	LOCA.NO	PART NO(GS)	SPECIFICATION
		CAPACITOR		
		C001	0CN2230H948	0.022M 25V Z F TA26
		C002	0CN1040K948	0.1M 50V Z F TA26
		C003	0CN2230H948	0.022M 25V Z F TA26
		C004	0CN1040K948	0.1M 50V Z F TA26
		C005	0CN1040K948	0.1M 50V Z F TA26
		C006	0CN2230H948	0.022M 25V Z F TA26
		C007	0CE4764F638	47M SRA/SS 16V M FM5 TP(5)
		C008	0CN2230H948	0.022M 25V Z F TA26
		C009	0CN2230H948	0.022M 25V Z F TA26
		C010	0CE4764F638	47M SRA/SS 16V M FM5 TP(5)
		C011	0CN1520F668	1500P 16V M X TA26
		C012	0CX3300K408	33P 50V J SL TA26
		C013	0CN2230H948	0.022M 25V Z F TA26
		C014	0CN2710K518	270P 50V K B TA26
		C015	0CE3344K638	0.33M SRA 50V M FM5 TP(5)
		C016	0CE4754K638	4.7M SRA 50V M FM5 TP(5)
		C017	0CE4764F638	47M SRA/SS 16V M FM5 TP(5)
		C018	0CN2230H948	0.022M 25V Z F TA26
		C019	0CX1000K408	10P 50V J SL TA26
		C020	0CX2400K408	24P 50V J SL TA26
		C021	0CN1030F678	0.01M 16V M Y TA26
		C022	0CX2200K408	22P 50V J SL TP26
		C023	0CN1030F678	0.01M 16V M Y TA26
		C024	0CX2200K408	22P 50V J SL TP26
		C025	0CX1500K408	15P 50V J SL TA26
		C026	0CX1800K408	18P 50V J SL TA26
		C027	0CN1030F678	0.01M 16V M Y TA26
		C028	0CX1200K408	12P 50V J SL TA26
		C029	0CC0600K015	6P 50V C NP0 TS
		C030	0CX3300K408	33P 50V J SL TA26
		C031	0CE4764F638	47M SRA/SS 16V M FM5 TP(5)
		C032	0CN2230H948	0.022M 25V Z F TA26
		C033	0CX2400K408	24P 50V J SL TA26
		C034	0CN1040K948	0.1M 50V Z F TA26
		C201	0CN2230H948	0.022M 25V Z F TA26
		C202	0CE4764F638	47M SRA/SS 16V M FM5 TP(5)
		C203	0CN1030F678	0.01M 16V M Y TA26
		C204	0CN1030F678	0.01M 16V M Y TA26
		C205	0CX2700K408	27P 50V J SL TA26
		C206	0CE4743K638	0.47M SRE/S50V M FM5 TP(5)
		C207	0CN1030F678	0.01M 16V M Y TA26
		C208	0CE1054K636	1.0U SRA 50V M FM5 BP TP(D)
		C209	0CQ4734K409	0.047U 50V J POLY TE TP

S	AL	LOCA.NO	PART NO(GS)	SPECIFICATION
		C210	0CQ1044K409	0.1U 50V J POLY TE TP
		C211	0CE4754K638	4.7M SRA 50V M FM5 TP(5)
		C212	0CN1210K518	120P 50V K B TA26
		C213	0CN1510K518	150P 50V K B TA26
		C214	0CE1064F638	10M SRA 16V M FM5 TP(5)
		C215	0CE1064F638	10M SRA 16V M FM5 TP(5)
		C216	0CN4720F668	4700P 16V M X TA26
		C217	0CQ4734K409	0.047U 50V J POLY TE TP
		C218	0CE1054K638	1.0M SRA/SS50V M FM5 TP(5)
		C219	0CQ2234K409	0.022U 50V J POLY TE TP
		C220	0CE2254K638	2.2M SRA 50V M FM5 TP(5)
		C221	0CQ4734K409	0.047U 50V J POLY TE TP
		C222	0CE1054K636	1.0U SRA 50V M FM5 BP TP(D)
		C223	0CE1064F638	10M SRA 16V M FM5 TP(5)
		C224	0CE1064F638	10M SRA 16V M FM5 TP(5)
		C225	0CE4754K638	4.7M SRA 50V M FM5 TP(5)
		C226	0CE4754K638	4.7M SRA 50V M FM5 TP(5)
		C227	0CE1054K638	1.0M SRA/SS50V M FM5 TP(5)
		C228	0CQ4734K409	0.047U 50V J POLY TE TP
		C229	0CN1030F678	0.01M 16V M Y TA26
		C230	0CQ1221N409	0.0012U 100V J POLY TP
		C231	0CE1054K636	1.0U SRA 50V M FM5 BP TP(D)
		C232	0CQ2234K409	0.022U 50V J POLY TE TP
		C233	0CE2254K638	2.2M SRA 50V M FM5 TP(5)
		C234	0CQ2234K409	0.022U 50V J POLY TE TP
		C235	0CE4766F638	47M SMS 16V M FM5 TP5
		C236	0CN1030F678	0.01M 16V M Y TA26
		C237	0CN1030F678	0.01M 16V M Y TA26
		C238	0CE4766F638	47M SMS 16V M FM5 TP5
		C239	0CC2400K415	24P 50V J NP0 TP
		C240	0CC2200K415	22P 50V J NP0 TS
		C241	0CE4754K638	4.7M SRA 50V M FM5 TP(5)
		C242	0CE4766F638	47M SMS 16V M FM5 TP5
		C243	0CN2230H948	0.022M 25V Z F TA26
		C244	0CN1020K518	1000P 50V K B TA26
		C245	0CN1020K518	1000P 50V K B TA26
		C246	0CN1030F678	0.01M 16V M Y TA26
		C247	0CN1030F678	0.01M 16V M Y TA26
		C248	0CN1030F678	0.01M 16V M Y TA26
		C249	0CN1030F678	0.01M 16V M Y TA26
		C250	0CE2273C638	220M SRE 6.3V M FM5 TP(5)
		C251	0CN1030F678	0.01M 16V M Y TA26
		C252	0CE4766F638	47M SMS 16V M FM5 TP5
		C253	0CN1030F678	0.01M 16V M Y TA26
		C254	624-027A	GOLD 0.047F-5.5V D13.0X8.5 NEC

RUN DATE : 95.09.27

S	AL	LOCA.NO	PART NO(GS)	SPECIFICATION
		C255	0CE4766F638	47M SMS 16V M FM5 TP5
		C256	0CE1074F638	100U SRA 16V M FM5 TP(5)
		C257	0CE2273C638	220M SRE 6.3V M FM5 TP(5)
		C258	0CE1054K638	1.0M SRA/SS50V M FM5 TP(5)
		C259	0CQ8221N409	0.0082U 100V J POLY TP
		C260	0CE4766F638	47M SMS 16V M FM5 TP5
		C261	0CN1030F678	0.01M 16V M Y TA26
		C262	0CE4766F638	47M SMS 16V M FM5 TP5
		C263	0CN2210K518	220P 50V K B TA26
		C264	0CN1030F678	0.01M 16V M Y TA26
		C266	0CN1040K948	0.1M 50V Z F TA26
		C267	0CN1030F678	0.01M 16V M Y TA26
		C268	0CE4766F638	47M SMS 16V M FM5 TP5
		C271	0CE1054K638	1.0M SRA/SS50V M FM5 TP(5)
		C272	0CN4730K948	0.047M 50V Z F TA26
		C273	0CE4766F638	47M SMS 16V M FM5 TP5
		C275	0CN4730K948	0.047M 50V Z F TA26
		C276	0CN1010K518	100P 50V K B TA26
		C277	0CN1010K518	100P 50V K B TA26
		C278	0CE4766F638	47M SMS 16V M FM5 TP5
		C279	0CN1030F678	0.01M 16V M Y TA26
		C280	0CN1040K948	0.1M 50V Z F TA26
		C281	0CE4766F638	47M SMS 16V M FM5 TP5
		C298	0CE4766K638	47M SMS 50V M FM5 TP
		C299	0CN1040K948	0.1M 50V Z F TA26
		C2A1	0CN1040K948	0.1M 50V Z F TA26
		C2A2	0CN1040K948	0.1M 50V Z F TA26
		C2A3	0CN1030F678	0.01M 16V M Y TA26
		C301	0CN1030F678	0.01M 16V M Y TA26
		C302	0CN1030F678	0.01M 16V M Y TA26
		C303	0CX4700K408	47P 50V J SL TA26
		C308	0CE4766F638	47M SMS 16V M FM5 TP5
		C30B	0CN1040K948	0.1M 50V Z F TA26
		C30C	0CN1040K948	0.1M 50V Z F TA26
		C30E	0CN1030F678	0.01M 16V M Y TA26
		C30F	0CE4766F638	47M SMS 16V M FM5 TP5
		C30G	0CN1020K518	1000P 50V K B TA26
		C30I	0CN1030F678	0.01M 16V M Y TA26
		C30J	0CX3300K408	33P 50V J SL TA26
		C30K	0CC0500K115	5P 50V D NP0 TS
		C30L	0CN1030F678	0.01M 16V M Y TA26
		C30M	0CN1030F678	0.01M 16V M Y TA26
		C30N	0CN1030F678	0.01M 16V M Y TA26
		C312	0CX3300K408	33P 50V J SL TA26
		C314	0CE4766F638	47M SMS 16V M FM5 TP5
		C315	0CN1030F678	0.01M 16V M Y TA26
		C316	0CE4766F638	47M SMS 16V M FM5 TP5
		C317	0CN1030F678	0.01M 16V M Y TA26
		C318	0CN4710K518	470P 50V K B TA26
		C31A	0CN1030F678	0.01M 16V M Y TA26
		C31C	0CN8200K518	82PF 50V K B TA26
		C31E	0CN1030F678	0.01M 16V M Y TA26
		C31H	0CE4766F638	47M SMS 16V M FM5 TP5
		C31J	0CX1000K408	10P 50V J SL TA26
		C31K	0CX1200K408	12P 50V J SL TA26
		C31L	0CN1030F678	0.01M 16V M Y TA26
		C320	0CE4766F638	47M SMS 16V M FM5 TP5
		C322	0CN1030F678	0.01M 16V M Y TA26
		C323	0CN1030F678	0.01M 16V M Y TA26
		C324	0CN1030F678	0.01M 16V M Y TA26
		C325	0CN1030F678	0.01M 16V M Y TA26
		C326	0CN1030F678	0.01M 16V M Y TA26

S	AL	LOCA.NO	PART NO(GS)	SPECIFICATION
		C327	0CN1030F678	0.01M 16V M Y TA26
		C328	0CE1053K638	1.0M SRE/SE50V M FM5 TP(5)
		C329	0CE4766F638	47M SMS 16V M FM5 TP5
		C330	0CE1053K638	1.0M SRE/SE50V M FM5 TP(5)
		C332	0CX2400K408	24P 50V J SL TA26
		C333	0CN8200K518	82PF 50V K B TA26
		C334	0CE4766F638	47M SMS 16V M FM5 TP5
		C335	0CN1030F678	0.01M 16V M Y TA26
		C336	0CN4710K518	470P 50V K B TA26
		C337	0CN1030F678	0.01M 16V M Y TA26
		C338	0CN2230H948	0.022M 25V Z F TA26
		C339	0CE3354K638	3.3M SRA 50V M FM5 TP(5)
		C340	0CN4730K948	0.047M 50V Z F TA26
		C341	0CE1043K638	0.1M SRE 50V M FM5 TP(5)
		C342	0CE4754K638	4.7M SRA 50V M FM5 TP(5)
		C343	0CE3354K638	3.3M SRA 50V M FM5 TP(5)
		C344	0CE2253K638	2.2M SRE 50V M FM5 TP(5)
		C345	0CE1064F638	10M SRA 16V M FM5 TP(5)
		C349	0CX3900K408	39P 50V J SL TA26
		C350	0CE4743K638	0.47M SRE/S50V M FM5 TP(5)
		C351	0CN1020K518	1000P 50V K B TA26
		C352	0CE2246K638	0.22M SMS 50V M FM5 TP(5)
		C353	0CN1510K518	150P 50V K B TA26
		C354	0CE1053K638	1.0M SRE/SE50V M FM5 TP(5)
		C355	0CN2230H948	0.022M 25V Z F TA26
		C357	0CN1030F678	0.01M 16V M Y TA26
		C358	0CN1030F678	0.01M 16V M Y TA26
		C359	0CE4775F638	470M SR 16V M FM5 TP(5)
		C360	0CN1030F678	0.01M 16V M Y TA26
		C361	0CX0100K608	1.0P 50V M SL TA(26)
		C362	0CE3354K638	3.3M SRA 50V M FM5 TP(5)
		C363	0CN1210K518	120P 50V K B TA26
		C364	0CX3300K408	33P 50V J SL TA26
		C365	0CE4754K638	4.7M SRA 50V M FM5 TP(5)
		C366	0CN1040K948	0.1M 50V Z F TA26
		C367	0CQ6831N409	0.068U 100V J POLY TP
		C368	0CE4743K638	0.47M SRE/S50V M FM5 TP(5)
		C369	0CE2246K638	0.22M SMS 50V M FM5 TP(5)
		C370	0CE4775F638	470M SR 16V M FM5 TP(5)
		C371	0CN1030F678	0.01M 16V M Y TA26
		C372	0CE1064F638	10M SRA 16V M FM5 TP(5)
		C373	0CN4710K518	470P 50V K B TA26
		C374	0CX2400K408	24P 50V J SL TA26
		C375	0CE4766F638	47M SMS 16V M FM5 TP5
		C376	0CE4743K638	0.47M SRE/S50V M FM5 TP(5)
		C377	0CN2230H948	0.022M 25V Z F TA26
		C378	0CX1800K408	18P 50V J SL TA26
		C379	0CE4754K638	4.7M SRA 50V M FM5 TP(5)
		C380	0CN4730K948	0.047M 50V Z F TA26
		C381	0CN1030F678	0.01M 16V M Y TA26
		C394	0CN1030F678	0.01M 16V M Y TA26
		C398	0CE1053K638	1.0M SRE/SE50V M FM5 TP(5)
		C399	0CN1030F678	0.01M 16V M Y TA26
		C3A0	0CX1000K408	10P 50V J SL TA26
		C3A1	0CN1030F678	0.01M 16V M Y TA26
		C3A2	0CN1030F678	0.01M 16V M Y TA26
		C3A3	0CE4766F638	47M SMS 16V M FM5 TP5
		C3A4	0CN2230H948	0.022M 25V Z F TA26
		C3A5	0CN1030F678	0.01M 16V M Y TA26
		C3A6	0CN1030F678	0.01M 16V M Y TA26
		C3A7	0CN1040K948	0.1M 50V Z F TA26
		C3A8	0CE4744K638	0.47M SRA 50V M FM5 TP(5)

S	AL	LOCA.NO	PART NO(GS)	SPECIFICATION
		C3B0	0CE4744K638	0.47M SRA 50V M FM5 TP(5)
		C3B1	0CN2230H948	0.022M 25V Z F TA26
		C3B2	0CE2254K638	2.2M SRA 50V M FM5 TP(5)
		C3B3	0CN1210K518	120P 50V K B TA26
		C3B4	0CC0600K015	6P 50V C NP0 TS
		C3B5	0CX1000K408	10P 50V J SL TA26
		C3B6	0CE4766F638	47M SMS 16V M FM5 TP5
		C3B7	0CN1030F678	0.01M 16V M Y TA26
		C3B8	0CC3900K415	39P 50V J NPO TP
		C3B9	0CN2230H948	0.022M 25V Z F TA26
		C3C0	0CN1030F678	0.01M 16V M Y TA26
		C3C1	0CN1040K948	0.1M 50V Z F TA26
		C3C2	0CE4766F638	47M SMS 16V M FM5 TP5
		C3C3	0CN2230H948	0.022M 25V Z F TA26
		C3C4	0CE1044K638	0.1M SRA 50V M FM5 TP(5)
		C3C5	0CN1030F678	0.01M 16V M Y TA26
		C3C6	0CN1030F678	0.01M 16V M Y TA26
		C3C7	0CE1064F638	10M SRA 16V M FM5 TP(5)
		C3C8	0CN1030F678	0.01M 16V M Y TA26
		C3C9	0CN1040K948	0.1M 50V Z F TA26
		C3E0	0CX1500K408	15P 50V J SL TA26
		C3E1	0CE1054K638	1.0M SRA/SS50V M FM5 TP(5)
		C3E2	0CE4754K638	4.7M SRA 50V M FM5 TP(5)
		C3E3	0CE4766F638	47M SMS 16V M FM5 TP5
		C3E4	0CN1040K948	0.1M 50V Z F TA26
		C3E5	0CE4754K638	4.7M SRA 50V M FM5 TP(5)
		C3E6	0CE1054K638	1.0M SRA/SS50V M FM5 TP(5)
		C3E7	0CN2230H948	0.022M 25V Z F TA26
		C3E8	0CE4766F638	47M SMS 16V M FM5 TP5
		C3E9	0CN3310K518	330P 50V K B TA26
		C3F0	0CN1030F678	0.01M 16V M Y TA26
		C3F1	0CX2200K408	22P 50V J SL TP26
		C3F2	0CE1044K638	0.1M SRA 50V M FM5 TP(5)
		C3F3	0CN1010K518	100P 50V K B TA26
		C3F4	0CX1200K408	12P 50V J SL TA26
		C3F5	0CX6800K408	68P 50V J SL TA26
		C3F6	0CN1030F678	0.01M 16V M Y TA26
		C3F7	0CN1010K518	100P 50V K B TA26
		C3F8	0CN1020K518	1000P 50V K B TA26
		C3F9	0CE4754K638	4.7M SRA 50V M FM5 TP(5)
		C3G0	0CN8200K518	82PF 50V K B TA26
		C3G1	0CN3910K518	390P 50V K B TA26
		C3G2	0CE1064F638	10M SRA 16V M FM5 TP(5)
		C3G3	0CN1520F668	1500P 16V M X TA26
		C3G4	0CE1054K638	1.0M SRA/SS50V M FM5 TP(5)
		C3G5	0CE4766F638	47M SMS 16V M FM5 TP5
		C3G6	0CN2230H948	0.022M 25V Z F TA26
		C3G7	0CE4766F638	47M SMS 16V M FM5 TP5
		C3G8	0CN2230H948	0.022M 25V Z F TA26
		C3G9	0CN1030F678	0.01M 16V M Y TA26
		C3H0	0CN4710K518	470P 50V K B TA26
		C3H1	0CE4766F638	47M SMS 16V M FM5 TP5
		C3H2	0CN2230H948	0.022M 25V Z F TA26
		C3H3	0CN2230H948	0.022M 25V Z F TA26
		C3H4	0CE4766F638	47M SMS 16V M FM5 TP5
		C3H5	0CC0400K015	4P 50V C NP0 TS
		C3H6	0CX2200K408	22P 50V J SL TP26
		C3H7	0CE4754K638	4.7M SRA 50V M FM5 TP(5)
		C3H8	0CN1030F678	0.01M 16V M Y TA26
		C3H9	0CN1040K948	0.1M 50V Z F TA26
		C3K0	0CE1064F638	10M SRA 16V M FM5 TP(5)
		C3K1	0CX4700K408	47P 50V J SL TA26

S	AL	LOCA.NO	PART NO(GS)	SPECIFICATION
		C3K2	0CQ8221N409	0.0082U 100V J POLY TP
		C401	0CE1054K638	1.0M SRA/SS50V M FM5 TP(5)
		C402	0CE1054K638	1.0M SRA/SS50V M FM5 TP(5)
		C403	0CN1040K948	0.1M 50V Z F TA26
		C404	0CN1040K948	0.1M 50V Z F TA26
		C405	0CE1064F638	10M SRA 16V M FM5 TP(5)
		C406	0CE1064F638	10M SRA 16V M FM5 TP(5)
		C407	0CE1064F638	10M SRA 16V M FM5 TP(5)
		C408	0CE1064F638	10M SRA 16V M FM5 TP(5)
		C409	0CE2266F638	22M SMS 16V M FM5 TP5
		C410	0CN1040K948	0.1M 50V Z F TA26
		C411	0CE1064F638	10M SRA 16V M FM5 TP(5)
		C412	0CE1054K638	1.0M SRA/SS50V M FM5 TP(5)
		C413	0CE1054K638	1.0M SRA/SS50V M FM5 TP(5)
		C414	0CE1054K638	1.0M SRA/SS50V M FM5 TP(5)
		C415	0CE1054K638	1.0M SRA/SS50V M FM5 TP(5)
		C416	0CE1064F638	10M SRA 16V M FM5 TP(5)
		C417	0CE1054K638	1.0M SRA/SS50V M FM5 TP(5)
		C418	0CE1064F638	10M SRA 16V M FM5 TP(5)
		C419	0CE1064F638	10M SRA 16V M FM5 TP(5)
		C420	0CE1064F638	10M SRA 16V M FM5 TP(5)
		C422	0CE1064F638	10M SRA 16V M FM5 TP(5)
		C423	0CE1064F638	10M SRA 16V M FM5 TP(5)
		C424	0CE1054K638	1.0M SRA/SS50V M FM5 TP(5)
		C425	0CE4754K638	4.7M SRA 50V M FM5 TP(5)
		C426	0CE1054K638	1.0M SRA/SS50V M FM5 TP(5)
		C427	0CE1054K638	1.0M SRA/SS50V M FM5 TP(5)
		C428	0CE2274F638	220M SRA 16V M FM5 TP(5)
		C429	0CE2266F638	22M SMS 16V M FM5 TP5
		C430	0CE3366F638	33M SMS 16V M FM5 TP(5)
		C431	0CE1064F638	10M SRA 16V M FM5 TP(5)
		C432	0CE1064F638	10M SRA 16V M FM5 TP(5)
		C433	0CE1054K638	1.0M SRA/SS50V M FM5 TP(5)
		C434	0CE4754K638	4.7M SRA 50V M FM5 TP(5)
		C435	0CE1054K638	1.0M SRA/SS50V M FM5 TP(5)
		C436	0CE2274F638	220M SRA 16V M FM5 TP(5)
		C437	0CN2230H948	0.022M 25V Z F TA26
		C438	0CN2230H948	0.022M 25V Z F TA26
		C439	0CE2274F638	220M SRA 16V M FM5 TP(5)
		C440	0CE4766F638	47M SMS 16V M FM5 TP5
		C441	0CN1040K948	0.1M 50V Z F TA26
		C442	0CQ1231N409	0.012U 100V J POLY TP
		C443	0CQ1031N409	0.01UF 100V J PE TP
		C444	0CN1030F678	0.01M 16V M Y TA26
		C445	0CE4766F638	47M SMS 16V M FM5 TP5
		C446	0CQ1031N409	0.01UF 100V J PE TP
		C447	0CN1030F678	0.01M 16V M Y TA26
		C448	0CE1074F638	100U SRA 16V M FM5 TP(5)
		C449	0CQ1031N409	0.01UF 100V J PE TP
		C450	0CE2266F638	22M SMS 16V M FM5 TP5
		C451	0CE1064F638	10M SRA 16V M FM5 TP(5)
		C452	0CE1054K638	1.0M SRA/SS50V M FM5 TP(5)
		C453	0CE1064F638	10M SRA 16V M FM5 TP(5)
		C454	0CN1040K948	0.1M 50V Z F TA26
		C455	0CE1064F638	10M SRA 16V M FM5 TP(5)
		C456	0CN1040K948	0.1M 50V Z F TA26
		C457	0CQ8221N409	0.0082U 100V J POLY TP
		C458	0CE2266F638	22M SMS 16V M FM5 TP5
		C459	0CE3366F638	33M SMS 16V M FM5 TP(5)
		C460	0CN3910K518	390P 50V K B TA26
		C461	0CQ5631N409	0.056U 100V J POLY TP
		C462	0CQ3331N409	0.033U 100V J POLY TP

RUN DATE : 95.09.27

S	AL	LOCA.NO	PART NO(GS)	SPECIFICATION
		C463	0CN2210K518	220P 50V K B TA26
		C464	0CN1030F678	0.01M 16V M Y TA26
		C465	0CE1074F638	100U SRA 16V M FM5 TP(5)
		C466	0CE4754K638	4.7M SRA 50V M FM5 TP(5)
		C467	0CQ1031N409	0.01UF 100V J PE TP
		C468	0CE1076F638	100M SMS 16V M FM5 TP(5)
		C469	0CN2230H948	0.022M 25V Z F TA26
		C470	0CE1064F638	10M SRA 16V M FM5 TP(5)
		C471	0CE1064F638	10M SRA 16V M FM5 TP(5)
		C472	0CQ1231N409	0.012U 100V J POLY TP
		C473	0CN1030F678	0.01M 16V M Y TA26
		C474	0CE4754K638	4.7M SRA 50V M FM5 TP(5)
		C475	0CN2710K518	270P 50V K B TA26
		C476	0CE4744K638	0.47M SRA 50V M FM5 TP(5)
		C477	0CN1030F678	0.01M 16V M Y TA26
		C478	0CE1064F638	10M SRA 16V M FM5 TP(5)
		C479	0CN1030F678	0.01M 16V M Y TA26
		C480	0CN1030F678	0.01M 16V M Y TA26
		C481	0CE1074F638	100U SRA 16V M FM5 TP(5)
		C482	0CN1030F678	0.01M 16V M Y TA26
		C483	0CN1040K948	0.1M 50V Z F TA26
		C484	0CN1030F678	0.01M 16V M Y TA26
		C485	0CE2274F638	220M SRA 16V M FM5 TP(5)
		C486	0CE4754K638	4.7M SRA 50V M FM5 TP(5)
		C487	0CN1030F678	0.01M 16V M Y TA26
		C488	0CQ1231N409	0.012U 100V J POLY TP
		C489	0CE1064F638	10M SRA 16V M FM5 TP(5)
		C490	0CE1064F638	10M SRA 16V M FM5 TP(5)
		C491	0CQ1031N409	0.01UF 100V J PE TP
		C492	0CE4754K638	4.7M SRA 50V M FM5 TP(5)
		C493	0CQ1031N409	0.01UF 100V J PE TP
		C494	0CQ1031N409	0.01UF 100V J PE TP
		C495	0CN2230H948	0.022M 25V Z F TA26
		C496	0CE1054K638	1.0M SRA/SS50V M FM5 TP(5)
		C497	0CE1054K638	1.0M SRA/SS50V M FM5 TP(5)
		C498	0CE4764F638	47M SRA/SS 16V M FM5 TP(5)
		C499	0CE4766F638	47M SMS 16V M FM5 TP5
		C4A0	0CN1030F678	0.01M 16V M Y TA26
		C4A1	0CE4766F638	47M SMS 16V M FM5 TP5(VHS)
		C4A1	0CN1030F678	0.01M 16V M Y TA26(8mm)
		C4A2	0CE1054K638	1.0M SRA/SS50V M FM5 TP(5)
		C4A3	0CN1030F678	0.01M 16V M Y TA26(8mm)
		C4A3	0CN1510K518	150P 50V K B TA26(VHS)
		C4A4	0CE1054K638	1M SRA/SS50V M FM5 TP(5)(8mm)
		C4A4	0CN1510K518	150P 50V K B TA26(VHS)
		C4A5	0CE1074F638	100U SRA 16V M FM5 TP(5)(VHS)
		C4A5	0CX3300K408	33P 50V J SL TA26(8mm)
		C4A6	0CN1020K518	1000P 50V K B TA26(8mm)
		C4A6	0CN1040K948	0.1M 50V Z F TA26(VHS)
		C4A7	0CN1020K518	1000P 50V K B TA26
		C4A8	0CE1054K638	1M SRA/SS50V M FM5 TP(5)(8mm)
		C4A8	0CN1040K948	0.1M 50V Z F TA26(VHS)
		C4A9	0CN1040K948	0.1M 50V Z F TA26(VHS)
		C4A9	0CN2220F668	2200P 16V M X TA26(8mm)
		C4B0	0CN1520F668	1500P 16V M X TA26
		C4B1	0CE3366F638	33M SMS 16V M FM5 TP(5)(8mm)
		C4B1	0CN1030F678	0.01M 16V M Y TA26(VHS)
		C4B2	0CE2254K638	2.2M SRA 50V M FM5 TP(5)(8mm)
		C4B2	0CE4766F638	47M SMS 16V M FM5 TP5(VHS)
		C4B3	0CE4754K638	4.7M SRA 50V M FM5 TP(5)
		C4B3	0CN1040K948	0.1M 50V Z F TA26
		C4B4	0CE1074F638	100U SRA 16V M FM5 TP(5)

S	AL	LOCA.NO	PART NO(GS)	SPECIFICATION
		C4B4	0CN1020K518	1000P 50V K B TA26
		C4B5	0CN1020K518	1000P 50V K B TA26
		C4B6	0CE1054K638	1.0M SRA/SS50V M FM5 TP(5)
		C4B7	0CN4710K518	470P 50V K B TA26
		C4B8	0CN1030F678	0.01M 16V M Y TA26
		C4B9	0CK3320K515	3300P 50V K B TS
		C4C0	0CE4754K638	4.7M SRA 50V M FM5 TP(5)
		C4C1	0CE1064F638	10M SRA 16V M FM5 TP(5)
		C4C2	0CE1054K638	1.0M SRA/SS50V M FM5 TP(5)
		C4C3	0CE4754K638	4.7M SRA 50V M FM5 TP(5)
		C4C4	0CE1064F638	10M SRA 16V M FM5 TP(5)
		C4C5	0CN4710K518	470P 50V K B TA26
		C4C6	0CN1030F678	0.01M 16V M Y TA26
		C4C7	0CK3320K515	3300P 50V K B TS
		C4C8	0CE1054K638	1.0M SRA/SS50V M FM5 TP(5)
		C4C9	0CN1020K518	1000P 50V K B TA26
		C4E0	0CN1020K518	1000P 50V K B TA26
		C4E1	0CE4766F638	47M SMS 16V M FM5 TP5
		C4E2	0CE2254K638	2.2M SRA 50V M FM5 TP(5)
		C4E3	0CE3366F638	33M SMS 16V M FM5 TP(5)
		C4E4	0CN1520F668	1500P 16V M X TA26
		C4E5	0CN2220F668	2200P 16V M X TA26
		C4E6	0CE1054K638	1.0M SRA/SS50V M FM5 TP(5)
		C4E7	0CN1020K518	1000P 50V K B TA26
		C4E8	0CN1020K518	1000P 50V K B TA26
		C4E9	0CE1054K638	1.0M SRA/SS50V M FM5 TP(5)
		C4F0	0CE1054K638	1.0M SRA/SS50V M FM5 TP(5)
		C4F1	0CX3300K408	33P 50V J SL TA26
		C4F2	0CN1030F678	0.01M 16V M Y TA26
		C4F3	0CN1220F668	1200P 16V M X TA26
		C4F4	0CE4766F638	47M SMS 16V M FM5 TP5
		C4F5	0CE1054K638	1.0M SRA/SS50V M FM5 TP(5)
		C4F6	0CN2230H948	0.022M 25V Z F TA26
		C4F7	0CE1054K638	1.0M SRA/SS50V M FM5 TP(5)
		C4F8	0CN1220F668	1200P 16V M X TA26
		C4G0	0CE1064F638	10M SRA 16V M FM5 TP(5)
		C4G1	0CE1064F638	10M SRA 16V M FM5 TP(5)
		C4G2	0CN2230H948	0.022M 25V Z F TA26
		C4G3	0CN1030F678	0.01M 16V M Y TA26
		C500	0CN1040K948	0.1M 50V Z F TA26
		C501	0CN1040K948	0.1M 50V Z F TA26
		C502	0CX1800K408	18P 50V J SL TA26
		C503	0CX2200K408	22P 50V J SL TP26
		C504	0CE4764F638	47M SRA/SS 16V M FM5 TP(5)
		C505	0CN1040K948	0.1M 50V Z F TA26
		C506	0CN1040K948	0.1M 50V Z F TA26
		C507	0CN1020K518	1000P 50V K B TA26
		C508	0CN1040K948	0.1M 50V Z F TA26
		C509	0CN1030F678	0.01M 16V M Y TA26
		C510	0CN1040K948	0.1M 50V Z F TA26
		C511	0CE4766F638	47M SMS 16V M FM5 TP5
		C512	0CN1040K948	0.1M 50V Z F TA26
		C513	0CE1054K638	1.0M SRA/SS50V M FM5 TP(5)
		C514	0CE4766F638	47M SMS 16V M FM5 TP5
		C515	0CN1040K948	0.1M 50V Z F TA26
		C516	0CN1030F678	0.01M 16V M Y TA26
		C517	0CN1040K948	0.1M 50V Z F TA26
		C518	0CN1040K948	0.1M 50V Z F TA26
		C519	0CN1040K948	0.1M 50V Z F TA26
		C520	0CN1040K948	0.1M 50V Z F TA26
		C521	0CE4766F638	47M SMS 16V M FM5 TP5
		C522	0CN1030F678	0.01M 16V M Y TA26

S	AL	LOCA.NO	PART NO(GS)	SPECIFICATION
		C523	0CN4730K948	0.047M 50V Z F TA26
		C524	0CE4766F638	47M SMS 16V M FM5 TP5
		C525	0CE4766F638	47M SMS 16V M FM5 TP5
		C526	0CN6820F668	6800P 16V M X TA26
		C527	0CN1040K948	0.1M 50V Z F TA26
		C528	0CN1020K518	1000P 50V K B TA26
		C529	0CN6820F668	6800P 16V M X TA26
		C530	0CN1040K948	0.1M 50V Z F TA26
		C531	0CN1020K518	1000P 50V K B TA26
		C532	0CE4766F638	47M SMS 16V M FM5 TP5
		C533	0CE4754K638	4.7M SRA 50V M FM5 TP(5)
		C534	0CN1040K948	0.1M 50V Z F TA26
		C535	0CN1040K948	0.1M 50V Z F TA26
		C536	0CE2266F638	22M SMS 16V M FM5 TP5
		C537	0CN1030F678	0.01M 16V M Y TA26
		C538	0CN1030F678	0.01M 16V M Y TA26
		C539	0CK3320K515	3300P 50V K B TS
		C540	0CK3320K515	3300P 50V K B TS
		C541	0CK3320K515	3300P 50V K B TS
		C542	0CE4766F638	47M SMS 16V M FM5 TP5
		C544	0CE4766F638	47M SMS 16V M FM5 TP5
		C545	0CN1040K948	0.1M 50V Z F TA26
		C546	0CN1040K948	0.1M 50V Z F TA26
		C547	0CN1030F678	0.01M 16V M Y TA26
		C548	0CN2710K518	270P 50V K B TA26
		C549	0CQ8221N409	0.0082U 100V J POLY TP
		C550	0CN1020K518	1000P 50V K B TA26
		C551	0CN2230H948	0.022M 25V Z F TA26
		C552	0CE4766F638	47M SMS 16V M FM5 TP5
		C553	0CC1000K015	10P 50V C NP0 TS
		C554	0CC1000K015	10P 50V C NP0 TS
		C555	0CN1040K948	0.1M 50V Z F TA26
		C556	0CN2230H948	0.022M 25V Z F TA26
		C557	0CE4766F638	47M SMS 16V M FM5 TP5
		C558	0CN4710K518	470P 50V K B TA26
		C559	0CN4710K518	470P 50V K B TA26
		C560	0CN1040K948	0.1M 50V Z F TA26
		C561	0CN1040K948	0.1M 50V Z F TA26
		C562	0CQ4721N409	0.0047U 100V J POLY TP
		C563	0CX1200K408	12P 50V J SL TA26
		C564	0CN1030F678	0.01M 16V M Y TA26
		C565	0CN1040K948	0.1M 50V Z F TA26
		C566	0CN1030F678	0.01M 16V M Y TA26
		C567	0CN1030F678	0.01M 16V M Y TA26
		C568	0CN1030F678	0.01M 16V M Y TA26
		C569	0CX5600K408	56P 50V J SL TA26
		C601	0CN1040K948	0.1M 50V Z F TA26
		C602	0CN1040K948	0.1M 50V Z F TA26
		C603	0CX1800K408	18P 50V J SL TA26
		C604	0CN1040K948	0.1M 50V Z F TA26
		C605	0CE4754H638	4.7M SRA 25V M FM5 TP(5)
		C606	0CE4766F638	47M SMS 16V M FM5 TP5
		C607	0CE2264F638	22M SRA 16V M FM5 TP(5)
		C608	0CN1020K518	1000P 50V K B TA26
		C609	0CE1054K638	1.0M SRA/SS50V M FM5 TP(5)
		C610	0CE1054K638	1.0M SRA/SS50V M FM5 TP(5)
		C611	0CE2254K638	2.2M SRA 50V M FM5 TP(5)
		C612	0CN1010K518	100P 50V K B TA26
		C613	0CN1040K948	0.1M 50V Z F TA26
		C614	0CN1040K948	0.1M 50V Z F TA26
		C615	0CN1020K518	1000P 50V K B TA26
		C616	0CN1040K948	0.1M 50V Z F TA26

S	AL	LOCA.NO	PART NO(GS)	SPECIFICATION
		C703	0CE4754K638	4.7M SRA 50V M FM5 TP(5)
		C704	0CN1040K948	0.1M 50V Z F TA26
		C705	0CN1040K948	0.1M 50V Z F TA26
		C707	0CN2230H948	0.022M 25V Z F TA26
		C709	0CN2230H948	0.022M 25V Z F TA26
		C710	0CE1074F638	100U SRA 16V M FM5 TP(5)
		C711	0CN2230H948	0.022M 25V Z F TA26
		C712	0CN1040K948	0.1M 50V Z F TA26
		C713	0CN1040K948	0.1M 50V Z F TA26
		C714	0CC1200K415	12P 50V J NP0 TS
		C716	0CE2254K638	2.2M SRA 50V M FM5 TP(5)
		C717	0CN4730K948	0.047M 50V Z F TA26
		C718	0CE4766F638	47M SMS 16V M FM5 TP5
		C719	0CN2230H948	0.022M 25V Z F TA26
		C720	0CE2254K638	2.2M SRA 50V M FM5 TP(5)
		C721	0CN6810K518	680P 50V K B TA26
		C722	0CE1074F638	100U SRA 16V M FM5 TP(5)
		C724	0CN2230H948	0.022M 25V Z F TA26
		C725	0CX4700K408	47P 50V J SL TA26
		C726	0CE4766F638	47M SMS 16V M FM5 TP5
		C727	0CN2230H948	0.022M 25V Z F TA26
		C728	0CX2200K408	22P 50V J SL TP26
		C729	0CN2230H948	0.022M 25V Z F TA26
		C730	0CE4766F638	47M SMS 16V M FM5 TP5
		C740	0CE2274F638	220M SRA 16V M FM5 TP(5)
		C741	0CC2700K415	27P 50V J NP0 TP
		C742	0CE4766F638	47M SMS 16V M FM5 TP5
		C743	0CN2230H948	0.022M 25V Z F TA26
		C744	0CE4766F638	47M SMS 16V M FM5 TP5
		C745	0CN1040K948	0.1M 50V Z F TA26
		C747	0CE4766F638	47M SMS 16V M FM5 TP5
		C748	0CN1040K948	0.1M 50V Z F TA26
		C749	0CN3910K518	390P 50V K B TA26
		C750	0CN3910K518	390P 50V K B TA26
		C751	0CQ6821N409	0.0068U 100V J POLY TP
		C752	0CE1064F638	10M SRA 16V M FM5 TP(5)
		C753	0CQ6821N409	0.0068U 100V J POLY TP
		C754	0CE1064F638	10M SRA 16V M FM5 TP(5)
		C756	0CN2230H948	0.022M 25V Z F TA26
		C757	0CE4766F638	47M SMS 16V M FM5 TP5
		C759	0CE3354K638	3.3M SRA 50V M FM5 TP(5)
		C760	0CN1040K948	0.1M 50V Z F TA26
		C761	0CN4710K518	470P 50V K B TA26
		C762	0CN4710K518	470P 50V K B TA26
		C763	0CE1064F638	10M SRA 16V M FM5 TP(5)
		C764	0CN1040K948	0.1M 50V Z F TA26
		C765	0CN1030F678	0.01M 16V M Y TA26
		C766	0CC1200K415	12P 50V J NP0 TS
		C767	0CC1200K415	12P 50V J NP0 TS
		C768	0CE4766F638	47M SMS 16V M FM5 TP5
		C769	0CN2230H948	0.022M 25V Z F TA26
		C770	0CE4766F638	47M SMS 16V M FM5 TP5
		C772	0CE2254K638	2.2M SRA 50V M FM5 TP(5)
		C773	0CN2230H948	0.022M 25V Z F TA26
		C774	0CN1040K948	0.1M 50V Z F TA26
		C775	0CN1040K948	0.1M 50V Z F TA26
		C776	0CN1040K948	0.1M 50V Z F TA26
		C779	0CE2274F638	220M SRA 16V M FM5 TP(5)
		C780	0CE4764F638	47M SRA/SS 16V M FM5 TP(5)
		C781	0CE4766F638	47M SMS 16V M FM5 TP5
		C782	0CN1040K948	0.1M 50V Z F TA26
		C785	0CE4766F638	47M SMS 16V M FM5 TP5

RUN DATE : 95.09.27

S	AL	LOCA.NO	PART NO(GS)	SPECIFICATION
		C801	0CE4766F638	47M SMS 16V M FM5 TP5
		C802	0CN1030F678	0.01M 16V M Y TA26
		C803	0CN1040K948	0.1M 50V Z F TA26
		C804	0CX6800K408	68P 50V J SL TA26
		C805	0CN1030F678	0.01M 16V M Y TA26
		C808	0CX6800K408	68P 50V J SL TA26
		C813	0CN1030F678	0.01M 16V M Y TA26
		C814	0CE4766F638	47M SMS 16V M FM5 TP5
		C815	0CE1064F638	10M SRA 16V M FM5 TP(5)
		C816	0CQ1021N409	0.001U 100V J POLY TP
		C817	0CQ3321N409	0.0033U 100V J POLY TP
		C818	0CQ3321N409	0.0033U 100V J POLY TP
		C819	0CQ6831N409	0.068U 100V J POLY TP
		C820	0CE1054K638	1.0M SRA/SS50V M FM5 TP(5)
		C821	0CE1054K638	1.0M SRA/SS50V M FM5 TP(5)
		C822	0CN1010K518	100P 50V K B TA26
		C823	0CE1064F638	10M SRA 16V M FM5 TP(5)
		C824	0CE4766F638	47M SMS 16V M FM5 TP5
		C825	0CN1030F678	0.01M 16V M Y TA26
		C826	0CE1076F638	100M SMS 16V M FM5 TP(5)
		C827	0CE4766F638	47M SMS 16V M FM5 TP5
		C828	0CX3300K408	33P 50V J SL TA26
		C829	0CX2200K408	22P 50V J SL TP26
		C830	0CE1076F638	100M SMS 16V M FM5 TP(5)
		C831	0CX3900K408	39P 50V J SL TA26
		C832	0CN1030F678	0.01M 16V M Y TA26
		C833	0CE1076F638	100M SMS 16V M FM5 TP(5)
		C835	0CE4775C638	470M SR 6.3V M FM5 TP(5)
		C836	0CN1010K518	100P 50V K B TA26
		C837	0CC1000K015	10P 50V C NP0 TS
		C838	0CC1200K415	12P 50V J NP0 TS
		C839	0CN1040K948	0.1M 50V Z F TA26
		C840	0CN1030F678	0.01M 16V M Y TA26
		C843	0CE1076F638	100M SMS 16V M FM5 TP(5)
		C845	0CE1054K638	1.0M SRA/SS50V M FM5 TP(5)
		C846	0CE1054K638	1.0M SRA/SS50V M FM5 TP(5)
		C847	0CE1054K638	1.0M SRA/SS50V M FM5 TP(5)
		C848	0CE1054K638	1.0M SRA/SS50V M FM5 TP(5)
		C849	0CE1054K638	1.0M SRA/SS50V M FM5 TP(5)
		C850	0CN1030F678	0.01M 16V M Y TA26
		C851	0CE1054K638	1.0M SRA/SS50V M FM5 TP(5)
		C852	0CN1020K518	1000P 50V K B TA26
		C853	0CN1020K518	1000P 50V K B TA26
		C854	0CN1020K518	1000P 50V K B TA26
		C856	0CN1020K518	1000P 50V K B TA26
		C859	0CN1020K518	1000P 50V K B TA26
		C860	0CN1020K518	1000P 50V K B TA26
		C864	0CN1020K518	1000P 50V K B TA26
		C871	0CN1020K518	1000P 50V K B TA26
		C874	0CE1064F638	10M SRA 16V M FM5 TP(5)
		C875	0CE1064F638	10M SRA 16V M FM5 TP(5)
		C876	0CE1064F638	10M SRA 16V M FM5 TP(5)
		C877	0CE1064F638	10M SRA 16V M FM5 TP(5)
		C878	0CE2264F638	22M SRA 16V M FM5 TP(5)
		C879	0CE1064F638	10M SRA 16V M FM5 TP(5)
		C880	0CE1064F638	10M SRA 16V M FM5 TP(5)
		C881	0CE2264F638	22M SRA 16V M FM5 TP(5)
		C882	0CE4766F638	47M SMS 16V M FM5 TP5
		C883	0CN1030F678	0.01M 16V M Y TA26
		C884	0CN1010K518	100P 50V K B TA26
		C885	0CN1010K518	100P 50V K B TA26
		C886	0CN1010K518	100P 50V K B TA26

S	AL	LOCA.NO	PART NO(GS)	SPECIFICATION
		C890	0CX6800K408	68P 50V J SL TA26
		C892	0CN1040K948	0.1M 50V Z F TA26
		C901	0CH1223K516	0.022U 50V K B 2.0X1.2 R/TP
		C903	0CH1103K516	0.01U 50V K B 2.0X1.25 R/TP
		C904	0CH4101K416	100P 50V J NP0 2.0*1.25 R/TP
		C905	0CH4270K416	27P 50V J COG 2.0X1.2 R/TP
		C906	0CH4561K416	560PF 50V J NP0 2012 R/TP
		C907	0CH4270K416	27P 50V J COG 2.0X1.2 R/TP
		C908	0CE1074F638	100U SRA 16V M FM5 TP(5)
		C909	0CN1030F678	0.01M 16V M Y TA26
		C910	0CE4764F638	47M SRA/SS 16V M FM5 TP(5)
		C911	0CN1030F678	0.01M 16V M Y TA26
		C912	0CH4121K416	120P 50V J NP0 2.0X1.2 R/TP
		C914	0CE1044K638	0.1M SRA 50V M FM5 TP(5)
		C915	0CH4330K416	33P 50V J C 2.0X1.2 R/TP
		C916	0CH1223K516	0.022U 50V K B 2.0X1.2 R/TP
		C917	0CN2230H948	0.022M 25V Z F TA26
		C918	0CE2244K638	0.22M SRA 50V M FM5 TP(5)
		C919	0CH4390K416	39P 50V J COG 2.0X1.2 R/TP
		C920	0CH4390K416	39P 50V J COG 2.0X1.2 R/TP
		C921	0CE2244K638	0.22M SRA 50V M FM5 TP(5)
		C922	0CH1223K516	0.022U 50V K B 2.0X1.2 R/TP
		C923	0CH1223K516	0.022U 50V K B 2.0X1.2 R/TP
		C924	0CE2244K638	0.22M SRA 50V M FM5 TP(5)
		C925	0CH4390K416	39P 50V J COG 2.0X1.2 R/TP
		C926	0CH4390K416	39P 50V J COG 2.0X1.2 R/TP
		C927	0CE2244K638	0.22M SRA 50V M FM5 TP(5)
		C928	0CH1223K516	0.022U 50V K B 2.0X1.2 R/TP
		C929	0CE4764F638	47M SRA/SS 16V M FM5 TP(5)
		C930	0CN1030F678	0.01M 16V M Y TA26
		C931	0CH4101K416	100P 50V J NP0 2.0*1.25 R/TP
		C932	0CE1054K638	1.0M SRA/SS50V M FM5 TP(5)
		C933	0CN1020K518	1000P 50V K B TA26
		C934	0CH4101K416	100P 50V J NP0 2.0*1.25 R/TP
		C935	0CH4101K416	100P 50V J NP0 2.0*1.25 R/TP
		C936	0CH4102K416	1000P 50V J X7R 2.0X1.25
		C937	0CE1054K638	1.0M SRA/SS50V M FM5 TP(5)
		C938	0CE1074F638	100U SRA 16V M FM5 TP(5)
		C939	0CN1030F678	0.01M 16V M Y TA26
		C940	0CE1054K638	1.0M SRA/SS50V M FM5 TP(5)
		C941	0CN1030F678	0.01M 16V M Y TA26
		C942	0CE1074F638	100U SRA 16V M FM5 TP(5)
		C943	0CH1103K516	0.01U 50V K B 2.0X1.25 R/TP
		C944	0CH1103K516	0.01U 50V K B 2.0X1.25 R/TP
		C945	0CH4560K416	56P 50V J NPO 2.0X1.25 R/TP
		C950	0CH1223K516	0.022U 50V K B 2.0X1.2 R/TP
	OR	CP01	624-088A	KNB1530 AC250V/0.1UF ISKARA
		CP01	624-088B	ECQU2A104MVA AC250/0.1UF MATSU
		CP03	624-066E	AC CON 472/400V,E,AA(S/S)
		CP04	624-066E	AC CON 472/400V,E,AA(S/S)
		CP05	624-084H	ES-2230-100-400-M SMPS RI-C
		CP06	0CE107BH638	100U KME 25V M FM5 TP5
		CP07	0CE107BH638	100U KME 25V M FM5 TP5
		CP08	624-087J	HIGH-VOL 102PF/1KV CERAMIC
		CP09	0CQ1021N409	0.001U 100V J POLY TP
		CP10	0CE1087H638	1000UF SXE 25V M FM5 TP5
		CP11	624-084E	HER-1320-1000-25-M SMPS RI-C
	OR	CP11	624-085E	CE 1000UF/25V KME (SMPS)
	OR	CP12	624-083E	1000/10V KME (SMPS) CE
		CP12	624-084N	HER-1016-1000-10-M SMPS RI-C
		CP13	0CE1086D638	1000UF SMS 10V M FM5 TP5
		CP16	0CE1087H638	1000UF SXE 25V M FM5 TP5

S	AL	LOCA.NO	PART NO(GS)	SPECIFICATION
		CP17	624-084E	HER-1320-1000-25-M SMPS RI-C
	OR	CP17	624-085E	CE 1000UF/25V KME (SMPS)
		CP20	0CE1076K638	100M SMS 50V M FM5 TP(5)
		CP21	0CE1086D638	1000UF SMS 10V M FM5 TP5
		CP22	0CE4766K638	47M SMS 50V M FM5 TP
		CP23	0CC2210K405	220P 50V J SL TP
		CP27	0CQ2731N409	0.027U 100V J POLY TP
		CP32	0CE4766K638	47M SMS 50V M FM5 TP
		CP36	624-086B	AC-CON 103/400V,Z,NU(N/K)
		CP38	624-066A	AC CON 220PF/400V,B,AA(S/S)
		CP39	624-066A	AC CON 220PF/400V,B,AA(S/S)
DIODE				
		BDP01	0DD160000DA	S1WBA60(1A 600V) SHIDENKEN
		D001	0DD131009AA	1SS131 DETECT,SW(26MM)TP ROHM
		D002	0DD131009AA	1SS131 DETECT,SW(26MM)TP ROHM
		D202	0DD131009AA	1SS131 DETECT,SW(26MM)TP ROHM
		D203	0DD131009AA	1SS131 DETECT,SW(26MM)TP ROHM
		D204	0DD131009AA	1SS131 DETECT,SW(26MM)TP ROHM
		D205	0DD131009AA	1SS131 DETECT,SW(26MM)TP ROHM
		D206	0DD131009AA	1SS131 DETECT,SW(26MM)TP ROHM
		D207	0DD131009AA	1SS131 DETECT,SW(26MM)TP ROHM
		D208	0DD131009AA	1SS131 DETECT,SW(26MM)TP ROHM
		D209	0DD400309AB	IN4003A(1SR35-200A)5M/M TP ROH
		D211	0DD131009AA	1SS131 DETECT,SW(26MM)TP ROHM
		D212	0DD400309AB	IN4003A(1SR35-200A)5M/M TP ROH
		D213	0DD400309AB	IN4003A(1SR35-200A)5M/M TP ROH
		D219	0DD131009AA	1SS131 DETECT,SW(26MM)TP ROHM
		D220	0DD131009AA	1SS131 DETECT,SW(26MM)TP ROHM
		D228	0DD131009AA	1SS131 DETECT,SW(26MM)TP ROHM
		D230	0DD131009AA	1SS131 DETECT,SW(26MM)TP ROHM
		D233	0DD131009AA	1SS131 DETECT,SW(26MM)TP ROHM
		D234	0DD131009AA	1SS131 DETECT,SW(26MM)TP ROHM
		D235	0DD400309AB	IN4003A(1SR35-200A)5M/M TP ROH
		D301	0DD131009AA	1SS131 DETECT,SW(26MM)TP ROHM
		D302	0DD131009AA	1SS131 DETECT,SW(26MM)TP ROHM
		D307	0DD400309AB	IN4003A(1SR35-200A)5M/M TP ROH
		D308	0DD400309AB	IN4003A(1SR35-200A)5M/M TP ROH
		D309	0DD400309AB	IN4003A(1SR35-200A)5M/M TP ROH
		D3A0	0DD131009AA	1SS131 DETECT,SW(26MM)TP ROHM
		D3A1	0DD131009AA	1SS131 DETECT,SW(26MM)TP ROHM
		D3A2	0DD131009AA	1SS131 DETECT,SW(26MM)TP ROHM
		D3A3	0DD131009AA	1SS131 DETECT,SW(26MM)TP ROHM
		D401	0DD131009AA	1SS131 DETECT,SW(26MM)TP ROHM
		D402	0DD131009AA	1SS131 DETECT,SW(26MM)TP ROHM
		D403	0DD131009AA	1SS131 DETECT,SW(26MM)TP ROHM
		D405	0DD131009AA	1SS131 DETECT,SW(26MM)TP ROHM
		D501	0DD400309AB	IN4003A(1SR35-200A)5M/M TP ROH
		D502	0DD400309AB	IN4003A(1SR35-200A)5M/M TP ROH
		D503	0DD400309AB	IN4003A(1SR35-200A)5M/M TP ROH
		D504	0DD400309AB	IN4003A(1SR35-200A)5M/M TP ROH
		D505	0DD400309AB	IN4003A(1SR35-200A)5M/M TP ROH
		D506	0DD400309AB	IN4003A(1SR35-200A)5M/M TP ROH
		D507	0DD400309AB	IN4003A(1SR35-200A)5M/M TP ROH
		D508	0DD131009AA	1SS131 DETECT,SW(26MM)TP ROHM
		D703	0DD400309AB	IN4003A(1SR35-200A)5M/M TP ROH
		D801	0DD131009AA	1SS131 DETECT,SW(26MM)TP ROHM
		D902	0DD193009AA	DIODE CHIP KDS193-T1(F3) KEC
		DP03	0DD010009AD	EG01ZW(R-FORM 5MM) TP SANKEN
		DP04	0DD010009AC	EU01W(R-FORM) TP SANKEN
		DP05	0DD010009AC	EU01W(R-FORM) TP SANKEN
		DP06	0DD400000AH	RU4YX SANKEN
		DP07	0DD207000AA	2A07 2A RECTIFIERS(T/S)DELTA
		DP08	0DD140000BA	FMBG14L SANKEN
		DP09	0DD120000BC	FMPG12S SANKEN
		DP10	0DD010009AC	EU01W(R-FORM) TP SANKEN
		DP11	0DD010009AC	EU01W(R-FORM) TP SANKEN
		DP12	0DD010009AC	EU01W(R-FORM) TP SANKEN
DISPLAY TUBE				
		DG601	514-031A	13BT-133GK DD1 FUTABA
		LM601	514-505C	LEVEL METER KI-212G2(15MM)ROHM
DELAY LINE				
		DL3A0	617-011A	MS-31PC (KSS)
FUSE				
		FP01	585-011C	T 1.6A 250V S506
FILTER				
		FL301	616-064D	L/C CL00047A 1.5M LPF S/S
		FL302	616-053A	HPF 1.4MHZ (DAE SHIN)
		FL3A0	616-234C	A285TCHS-K5315 DD1P K-TOKO
		FL3A1	616-234A	A285TCHS-K5305 CAN-COIL DD1P
		FL3A2	616-234B	A285TCHS-K5306 DD1P K-TOKO
		FL3A4	616-126G	L/C BPF CB0067 4.43BPF S/S
		FL401	616-405B	F-K5D9568A 1.8M SAMMI C900P
		FL402	616-405A	F-K5D9567A 1.4M SAMMI C900P
		FL403	616-069C	LPF 12KHZ(JH-1058) SAMMI
		FL4A0	616-167A	1.7MBPF TH328BTLS-K5318 K-TOKO
		FL4A1	616-154A	1.5BPF TH328BTLS-K5317K-TOKO D
		FL701	616-069C	LPF 12KHZ(JH-1058) SAMMI
		FL702	616-069C	LPF 12KHZ(JH-1058) SAMMI
		FLP01	616-145A	LINE FILTER SQE TYPE 33MH(BUJ)
		Z701	616-098A	SAW OFWG3203 SIEMENS
		Z703	616-036E	TRAP TPS5.74MB MURATA
		Z704	616-036B	TRAP TPS5.5MB MURA
		Z705	616-714A	MKT40MA100P MURATA
IC				
		IC001	0IHI118191A	HA118191NT PRE-AMP DIP
		IC201	0IMI381850Q	M38185ME-134FP(SY+TI) R-DV10S
		IC202	0INA241600A	NM24C16N(EEPROM.16K) OC3600
		IC203	0IMT523000B	PST-523G/T(3.3V) LOW
		IC204	0IHI497560A	HD49756NT(SERVO)
		IC205	0IRH704800A	BA7048N(ENVLOPE-DETECT)
		IC206	0IGS744500A	GL7445 (MOTOR DRIV-1CH) GSS
		IC207	0ISM564900A	SDA5649 (VPS+PDC)
		IC301	0IHI118201A	HA118201CF Y/C PAL/MULTI
		IC303	0IKK746063A	MSM7460-63RS CCD(PAL) DIP
		IC3A0	0IHI118172A	HA118172F(Y/C 8MM)HARD TRAY
		IC3A1	0ISO120300A	CXA1203M(8MM PAL JOG)SOP-24P-L
		IC3A2	0IKK740300A	MSM7403MS(2H CCD)FLAT KINSEKI
		IC401	0IRH779000A	BA7790LS(AUDIO NORMAL)
		IC402	0ITO881300A	TA8813AN(HI-FI MAIN PAL)
		IC403	0ISG642000A	TEA6420 S/W IC DIP
		IC404	0ISA722200A	LA7222 (1280 AUDIO)
		IC4A0	0IHI118276A	HA118276F
		IC501	0ISO807240S	CXP80724-345Q(SY+SE)R-DV10S
		IC502	0IMT523000C	PST-523D/T
		IC503	0ISA183600A	LB1836M-TEL LOADING MOT 1K/TP

RUN DATE : 95.09.27

S	AL	LOCA.NO	PART NO(GS)	SPECIFICATION
		IC504	0ISO112700A	CXA1127M-T6 CAP-M DRIV 30SOP
		IC505	0IGS740600A	GL7406 (MOTOR DRIV) TAPING
		IC506	0ISO151200A	CXA1512M
		IC507	0IGS358000E	GL358D (T&R) OP AMP 2.5K/TP
		IC508	0IEX108230A	XR-10823(ATF)QFP32
		IC601	0INE163110A	UPD16311GC-AB6 FIP DRIV 52PQFP
		IC602	0IRH152180B	BA15218(HEAD-PHONE AMP)DIP
		IC701	0IPH980000A	TDA9800 VIF PLL DEM & FM DET
		IC704	0IIT341000A	MSP3410(NICAM+G2) OC3600
		IC801	0IMI350100M	M35010-110SP(OSD)BF900P/3600H
		IC802	0ISG640000A	STV6400 S/W IC DIP
		IC803	0IJR222900A	NJM2229S SYNC SEPA (SIP PACK)
		IC805	0IJR224900A	NJM2249L S/W (8 PIN SIP)
		IC806	0IGS324000A	GL324 (QUAD PUPLE OP AMP)
		IC901	0IHI118019A	HA118019NT(PRE-AMP 4HD)
		IC902	0IRH774000A	BA7740S (PRE-AMP HI-FI)
		ICP01	0ISK670700B	STR/S6707(LF.953) 9P (R5,R6)
		ICP03	0IKE431000A	KIA431
		JACK		
		JK601	572-055A	MIC HSJ1406-01-010
		COIL		
		BD701	636-010F	BEAD,BL01R1-A62T5,MURATA TAPIN
		BD801	0LA0101K018	1.0M K 2.3X3.4 L5 TP
		BD802	636-010F	BEAD,BL01R1-A62T5,MURATA TAPIN
		L001	0LR1000K035	100M K 6X6 L5 TP
		L002	0LR1000K035	100M K 6X6 L5 TP
		L003	0LR8200K035	820M K 6X6 L5 TP
		L004	0LR3300K035	330M K 6X6 L5 TP
		L005	0LA1800K018	180M K 2.3X3.4 L5 TP
		L006	0LA0222K018	22M K 2.3X3.4 L5 TP
		L007	0LA0392K018	39M K 2.3X3.4 L5 TP
		L008	0LA0332K018	33M K 2.3X3.4 L5 TP
		L009	0LA0222K018	22M K 2.3X3.4 L5 TP
		L010	0LR1000K035	100M K 6X6 L5 TP
		L011	0LA0102K018	10M K 2.3X3.4 L5 TP
		L012	0LA0332K018	33M K 2.3X3.4 L5 TP
		L013	0LA0222K018	22M K 2.3X3.4 L5 TP
		L014	0LA0222K018	22M K 2.3X3.4 L5 TP
		L015	0LR1000K035	100M K 6X6 L5 TP
		L201	0LR1000K035	100M K 6X6 L5 TP
		L203	0LR1200K035	120M K 6X6 L5 TP
		L204	0LR1000K035	100M K 6X6 L5 TP
		L205	0LR1000K035	100M K 6X6 L5 TP
		L206	0LR1000K035	100M K 6X6 L5 TP
		L207	0LR1000K035	100M K 6X6 L5 TP
		L208	0LA0472K018	47M K 2.3X3.4 L5 TP
		L210	0LR1000K035	100M K 6X6 L5 TP
		L211	0LR1000K035	100M K 6X6 L5 TP
		L212	0LR1000K035	100M K 6X6 L5 TP
		L302	0LA1500K018	150M K 2.3X3.4 L5 TP
		L307	0LR1000K035	100M K 6X6 L5 TP
		L308	0LR1000K035	100M K 6X6 L5 TP
		L311	0LR1000K035	100M K 6X6 L5 TP
		L312	0LA0682K018	68M K 2.3X3.4 L5 TP
		L313	0LR1000K035	100M K 6X6 L5 TP
		L314	0LA0822K018	82M K 2.3X3.4 L5 TP
		L315	0LR1000K035	100M K 6X6 L5 TP
		L316	0LR3900K035	390M K 6X6 L5 TP
		L317	0LA0152K018	15M K 2.3X3.4 L5 TP

S	AL	LOCA.NO	PART NO(GS)	SPECIFICATION
		L318	0LA0102K018	10M K 2.3X3.4 L5 TP
		L319	0LR1000K035	100M K 6X6 L5 TP
		L321	0LA2200K018	220M K 2.3X3.4 L5 TP
		L322	0LA0392K018	39M K 2.3X3.4 L5 TP
		L325	0LR1000K035	100M K 6X6 L5 TP
		L326	0LA0272K018	27M K 2.3X3.4 L5 TP
		L328	0LA0472K018	47M K 2.3X3.4 L5 TP
		L329	0LA0102K018	10M K 2.3X3.4 L5 TP
		L331	0LA0682K018	68M K 2.3X3.4 L5 TP
		L333	0LA0122K018	12M K 2.3X3.4 L5 TP
		L334	0LR1000K035	100M K 6X6 L5 TP
		L3A0	0LR1000K035	100M K 6X6 L5 TP
		L3A1	0LR0332K035	33M K 6X6 L5 TP
		L3A2	0LA1800K018	180M K 2.3X3.4 L5 TP
		L3A3	0LA0102K018	10M K 2.3X3.4 L5 TP
		L3A4	0LA0222K018	22M K 2.3X3.4 L5 TP
		L3A5	0LR1000K035	100M K 6X6 L5 TP
		L3A6	0LR1000K035	100M K 6X6 L5 TP
		L3A7	0LR1000K035	100M K 6X6 L5 TP
		L3A8	0LR1000K035	100M K 6X6 L5 TP
		L3A9	0LA0152K018	15M K 2.3X3.4 L5 TP
		L3B0	0LR1000K035	100M K 6X6 L5 TP
		L3B1	0LR1000K035	100M K 6X6 L5 TP
		L3B2	0LA0682K018	68M K 2.3X3.4 L5 TP
		L3B3	0LR3300K035	330M K 6X6 L5 TP
		L3B4	0LR8200K035	820M K 6X6 L5 TP
		L401	0LR1000K035	100M K 6X6 L5 TP
		L402	0LR1000K035	100M K 6X6 L5 TP
		L403	0LR1000K035	100M K 6X6 L5 TP
		L404	0LR1000K035	100M K 6X6 L5 TP
		L405	0LR1000K035	100M K 6X6 L5 TP
		L406	0LR1502J045	0.015H J 6X7 L5 TP
		L407	0LR1000K035	100M K 6X6 L5 TP
		L408	0LR1000K035	100M K 6X6 L5 TP
		L409	0LR1000K035	100M K 6X6 L5 TP
		L4A0	0LR1000K035	100M K 6X6 L5 TP
		L501	0LR1000K035	100M K 6X6 L5 TP
		L502	0LR1000K035	100M K 6X6 L5 TP
		L503	0LR1000K035	100M K 6X6 L5 TP
		L504	0LR1000K035	100M K 6X6 L5 TP
		L505	0LR1000K035	100M K 6X6 L5 TP
		L506	0LR1000K035	100M K 6X6 L5 TP
		L507	0LR1000K035	100M K 6X6 L5 TP
		L508	0LR1000K035	100M K 6X6 L5 TP
		L509	0LA1800K018	180M K 2.3X3.4 L5 TP
		L510	0LR8200J025	820UH 5% 4X5 TR5
		L511	0LR1000K035	100M K 6X6 L5 TP
		L512	0LR1000K035	100M K 6X6 L5 TP
		L601	0LA1000K018	100M K 2.3X3.4 L5 TP
		L704	0LA0121K018	1.2M K 2.3X3.4 L5 TP
		L705	0LA0102K018	10M K 2.3X3.4 L5 TP
		L706	0LR1000K035	100M K 6X6 L5 TP
		L707	0LA0332K018	33M K 2.3X3.4 L5 TP
		L708	0LR1000K035	100M K 6X6 L5 TP
		L709	0LR1000K035	100M K 6X6 L5 TP
		L714	0LR1000K035	100M K 6X6 L5 TP
		L715	0LR1000K035	100M K 6X6 L5 TP
		L716	0LR1000K035	100M K 6X6 L5 TP
		L717	0LR1000K035	100M K 6X6 L5 TP
		L718	0LR1000K035	100M K 6X6 L5 TP
		L719	0LR1000K035	100M K 6X6 L5 TP
		L720	0LR1000K035	100M K 6X6 L5 TP

S	AL	LOCA.NO	PART NO(GS)	SPECIFICATION
		L721	0LR1000K035	100M K 6X6 L5 TP
		L801	0LR1000K035	100M K 6X6 L5 TP
		L803	0LR1000K035	100M K 6X6 L5 TP
		L804	0LR1000K035	100M K 6X6 L5 TP
		L805	0LA0332K018	33M K 2.3X3.4 L5 TP
		L806	0LA0122K018	12M K 2.3X3.4 L5 TP
		L807	0LR1000K035	100M K 6X6 L5 TP
		L808	0LA1000K018	100M K 2.3X3.4 L5 TP
		L809	0LA1000K018	100M K 2.3X3.4 L5 TP
		L810	0LA1000K018	100M K 2.3X3.4 L5 TP
		L811	0LA1000K018	100M K 2.3X3.4 L5 TP
		L812	0LA1000K018	100M K 2.3X3.4 L5 TP
		L813	0LA1000K018	100M K 2.3X3.4 L5 TP
		L814	0LA1000K018	100M K 2.3X3.4 L5 TP
		L815	0LA1000K018	100M K 2.3X3.4 L5 TP
		L816	0LR1000K035	100M K 6X6 L5 TP
		L817	0LR1000K035	100M K 6X6 L5 TP
		L818	0LA0222K018	22M K 2.3X3.4 L5 TP
		L819	0LA0222K018	22M K 2.3X3.4 L5 TP
		L820	0LA0222K018	22M K 2.3X3.4 L5 TP
		L8C1	0LA0101K018	1.0M K 2.3X3.4 L5 TP
		L901	0LR1000K035	100M K 6X6 L5 TP
		L902	0LA0681K018	6.8M K 2.3X3.4 L5 TP
		L903	0LA0181K018	1.8M K 2.3X3.4 L5 TP
		L904	0LR1000K035	100M K 6X6 L5 TP
		L905	0LR1000K035	100M K 6X6 L5 TP
		L906	0LR1000K035	100M K 6X6 L5 TP
		L907	0LR3300K035	330M K 6X6 L5 TP
		LP01	636-004C	BEAD CORE BFS3550R2FD8,R T/P
		LP02	636-004C	BEAD CORE BFS3550R2FD8,R T/P
		LP03	633-088A	SC-20M CHOKE,COIL
		LP04	633-088A	SC-20M CHOKE,COIL
		LP06	633-088A	SC-20M CHOKE,COIL
		T401	633-032C	BIAS-OSC(MISUMI) 70KHZ
		T402	633-032C	BIAS-OSC(MISUMI) 70KHZ
		T701	633-085A	V-COIL 2920N-K5592Z 77.8 TOKO
		T702	633-021C	PIF(D/S)
			LED	
		LD601	0DL112000AK	DL-11S2GNS(SU,G,03,SM3411) KOC
		LD602	0DL112000AK	DL-11S2GNS(SU,G,03,SM3411) KOC
		LD6A1	0DL112000AK	DL-11S2GNS(SU,G,03,SM3411) KOC
		LD6A2	0DL112000AK	DL-11S2GNS(SU,G,03,SM3411) KOC
			MODULATOR	
		MD701	592-808A	MCB8-UG3630 PAL B/G WO ATT
			CIRCUIT BOARD ASSEMBLY	
		PBIO0	6871R-0252A	I/O BOARD (2NDDD1S)
		PBJT0	515-908B	JUNCTION 2 (G/S)
		PBM00	6871R-0245D	VHS MAIN (DV13P 3GL1)
		PBT00	6871R-0248A	TIMER 2NDDD1S
			TRANSFORMER	
		PTP01	642-019A	S/W TRANS EER3530(SUPER PAL)
			TRANSISTOR	
		Q001	0TR319909AF	KTC3199-BL MINI TP KEC
		Q002	0TR319909AF	KTC3199-BL MINI TP KEC

S	AL	LOCA.NO	PART NO(GS)	SPECIFICATION
		Q003	0TR103009AE	KRC103M-TP (KRC1203) KEC
		Q005	0TR103009AE	KRC103M-TP (KRC1203) KEC
		Q006	0TR126709AC	KTA1267-GR MINI TP KEC
		Q007	0TR319909AF	KTC3199-BL MINI TP KEC
		Q008	0TR319909AF	KTC3199-BL MINI TP KEC
		Q009	0TR319909AF	KTC3199-BL MINI TP KEC
		Q010	0TR319709AC	KTC3197 (KTC388A) TP KEC
		Q011	0TR319909AF	KTC3199-BL MINI TP KEC
		Q012	0TR126709AC	KTA1267-GR MINI TP KEC
		Q013	0TR319909AF	KTC3199-BL MINI TP KEC
		Q014	0TR126709AC	KTA1267-GR MINI TP KEC
		Q015	0TR103009AE	KRC103M-TP (KRC1203) KEC
		Q201	0TR103009AE	KRC103M-TP (KRC1203) KEC
		Q202	0TR103009AE	KRC103M-TP (KRC1203) KEC
		Q203	0TR103009AE	KRC103M-TP (KRC1203) KEC
		Q204	0TR319809AC	KTC3198-TP-BL (KTC1815)KEC
		Q205	0TR319809AC	KTC3198-TP-BL (KTC1815)KEC
		Q206	0TR103009AE	KRC103M-TP (KRC1203) KEC
		Q207	0TR127309AA	KTA1273-TP-Y (KTA966A)KEC
		Q208	0TR103009AE	KRC103M-TP (KRC1203) KEC
		Q209	0TR103009AF	KRA103M-TP (KRA2203) KEC
		Q210	0TR103009AF	KRA103M-TP (KRA2203) KEC
		Q211	0TR103009AF	KRA103M-TP (KRA2203) KEC
		Q212	0TR319809AC	KTC3198-TP-BL (KTC1815)KEC
		Q213	0TR319809AC	KTC3198-TP-BL (KTC1815)KEC
		Q215	0TR320509AB	KTC3205-TP-Y (KTC2236A)KEC
		Q217	0TR103009AE	KRC103M-TP (KRC1203) KEC
		Q218	0TR103009AE	KRC103M-TP (KRC1203) KEC
		Q219	0TR103009AE	KRC103M-TP (KRC1203) KEC
		Q220	0TR126609AE	KTA1266-GR,TP(KTA1015),KEC
		Q221	0TR103009AE	KRC103M-TP (KRC1203) KEC
		Q222	0TR127309AA	KTA1273-TP-Y (KTA966A)KEC
		Q223	0TR103009AE	KRC103M-TP (KRC1203) KEC
		Q224	0TR127309AA	KTA1273-TP-Y (KTA966A)KEC
		Q301	0TR319809AC	KTC3198-TP-BL (KTC1815)KEC
		Q302	0TR319809AC	KTC3198-TP-BL (KTC1815)KEC
		Q304	0TR126709AC	KTA1267-GR MINI TP KEC
		Q305	0TR103009AE	KRC103M-TP (KRC1203) KEC
		Q306	0TR126709AC	KTA1267-GR MINI TP KEC
		Q307	0TR103009AE	KRC103M-TP (KRC1203) KEC
		Q308	0TR126709AC	KTA1267-GR MINI TP KEC
		Q309	0TR319809AC	KTC3198-TP-BL (KTC1815)KEC
		Q310	0TR103009AE	KRC103M-TP (KRC1203) KEC
		Q311	0TR103009AE	KRC103M-TP (KRC1203) KEC
		Q312	0TR319809AC	KTC3198-TP-BL (KTC1815)KEC
		Q313	0TR126709AC	KTA1267-GR MINI TP KEC
		Q315	0TR103009AE	KRC103M-TP (KRC1203) KEC
		Q320	0TR319809AC	KTC3198-TP-BL (KTC1815)KEC
		Q323	0TR319809AC	KTC3198-TP-BL (KTC1815)KEC
		Q324	0TR103009AF	KRA103M-TP (KRA2203) KEC
		Q325	0TR103009AE	KRC103M-TP (KRC1203) KEC
		Q326	0TR126709AC	KTA1267-GR MINI TP KEC
		Q327	0TR319809AC	KTC3198-TP-BL (KTC1815)KEC
		Q328	0TR319809AC	KTC3198-TP-BL (KTC1815)KEC
		Q329	0TR103009AE	KRC103M-TP (KRC1203) KEC
		Q3A0	0TR319909AF	KTC3199-BL MINI TP KEC
		Q3A1	0TR103009AE	KRC103M-TP (KRC1203) KEC
		Q3A2	0TR103009AE	KRC103M-TP (KRC1203) KEC
		Q3A4	0TR127309AA	KTA1273-TP-Y (KTA966A)KEC
		Q3A5	0TR103009AE	KRC103M-TP (KRC1203) KEC
		Q3A7	0TR103009AE	KRC103M-TP (KRC1203) KEC
		Q3A8	0TR103009AE	KRC103M-TP (KRC1203) KEC

RUN DATE : 95.09.27

S	AL	LOCA.NO	PART NO(GS)	SPECIFICATION
		Q3A9	0TR103009AF	KRA103M-TP (KRA2203) KEC
		Q3B0	0TR103009AE	KRC103M-TP (KRC1203) KEC
		Q3B1	0TR103009AE	KRC103M-TP (KRC1203) KEC
		Q3B2	0TR319909AF	KTC3199-BL MINI TP KEC
		Q3B3	0TR126709AC	KTA1267-GR MINI TP KEC
		Q3B4	0TR319909AF	KTC3199-BL MINI TP KEC
		Q3E1	0TR319909AF	KTC3199-BL MINI TP KEC
		Q401	0TR319809AC	KTC3198-TP-BL (KTC1815)KEC
		Q402	0TR319809AC	KTC3198-TP-BL (KTC1815)KEC
		Q403	0TR319809AC	KTC3198-TP-BL (KTC1815)KEC
		Q404	0TR126709AC	KTA1267-GR MINI TP KEC
		Q405	0TR126709AC	KTA1267-GR MINI TP KEC
		Q406	0TR103009AE	KRC103M-TP (KRC1203) KEC
		Q407	0TR103009AE	KRC103M-TP (KRC1203) KEC
		Q408	0TR320509AB	KTC3205-TP-Y (KTC2236A)KEC
		Q409	0TR103009AE	KRC103M-TP (KRC1203) KEC
		Q410	0TR103009AE	KRC103M-TP (KRC1203) KEC
		Q411	0TR320509AB	KTC3205-TP-Y (KTC2236A)KEC
		Q412	0TR103009AE	KRC103M-TP (KRC1203) KEC
		Q413	0TR103009AE	KRC103M-TP (KRC1203) KEC
		Q414	0TR320509AB	KTC3205-TP-Y (KTC2236A)KEC
		Q415	0TR126709AC	KTA1267-GR MINI TP KEC
		Q416	0TR126709AC	KTA1267-GR MINI TP KEC
		Q417	0TR126709AC	KTA1267-GR MINI TP KEC
		Q418	0TR320509AB	KTC3205-TP-Y (KTC2236A)KEC
		Q419	0TR126709AC	KTA1267-GR MINI TP KEC
		Q420	0TR320509AB	KTC3205-TP-Y (KTC2236A)KEC
		Q421	0TR103009AE	KRC103M-TP (KRC1203) KEC
		Q4A0	0TR319909AF	KTC3199-BL MINI TP KEC
		Q4A1	0TR319909AF	KTC3199-BL MINI TP KEC
		Q4A2	0TR319909AF	KTC3199-BL MINI TP KEC
		Q4A3	0TR319909AF	KTC3199-BL MINI TP KEC
		Q4A4	0TR103009AE	KRC103M-TP (KRC1203) KEC
		Q4A5	0TR103009AF	KRA103M-TP (KRA2203) KEC
		Q4A6	0TR103009AE	KRC103M-TP (KRC1203) KEC
		Q502	0TR223609AB	KTC2236A-Y=KTC3205Y TP KEC
		Q503	0TR126609AE	KTA1266-GR,TP(KTA1015),KEC
		Q504	0TR205800AA	KTD2058-0 KEC
		Q505	0TR126609AE	KTA1266-GR,TP(KTA1015),KEC
		Q506	0TR126609AE	KTA1266-GR,TP(KTA1015),KEC
		Q507	0TR126609AE	KTA1266-GR,TP(KTA1015),KEC
		Q508	0TR205800AA	KTD2058-0 KEC
		Q509	0TR319809AC	KTC3198-TP-BL (KTC1815)KEC
		Q510	0TR103009AE	KRC103M-TP (KRC1203) KEC
		Q601	0TR319809AC	KTC3198-TP-BL (KTC1815)KEC
		Q6B1	0TR319809AC	KTC3198-TP-BL (KTC1815)KEC
		Q701	0TR319709AC	KTC3197 (KTC388A) TP KEC
		Q703	0TR319809AC	KTC3198-TP-BL (KTC1815)KEC
		Q709	0TR103009AE	KRC103M-TP (KRC1203) KEC
		Q710	0TR126709AC	KTA1267-GR MINI TP KEC
		Q712	0TR320509AB	KTC3205-TP-Y (KTC2236A)KEC
		Q801	0TR126709AC	KTA1267-GR MINI TP KEC
		Q802	0TR103009AE	KRC103M-TP (KRC1203) KEC
		Q803	0TR103009AE	KRC103M-TP (KRC1203) KEC
		Q804	0TR126709AC	KTA1267-GR MINI TP KEC
		Q805	0TR103009AE	KRC103M-TP (KRC1203) KEC
		Q806	0TR319909AF	KTC3199-BL MINI TP KEC
		Q807	0TR319909AF	KTC3199-BL MINI TP KEC
		Q808	0TR103009AE	KRC103M-TP (KRC1203) KEC
		Q809	0TR126709AC	KTA1267-GR MINI TP KEC
		Q810	0TR319909AF	KTC3199-BL MINI TP KEC
		Q811	0TR319909AF	KTC3199-BL MINI TP KEC

S	AL	LOCA.NO	PART NO(GS)	SPECIFICATION
		Q812	0TR319909AF	KTC3199-BL MINI TP KEC
		Q814	0TR319909AF	KTC3199-BL MINI TP KEC
		Q902	0TR103009AA	CHIP KRC103S-T1(NC)22-22 KEC
		Q903	0TR103009AA	CHIP KRC103S-T1(NC)22-22 KEC
		Q904	0TR150409AC	KTA1504-GR-T1(ASG) CHIP KEC
		Q905	0TR150409AC	KTA1504-GR-T1(ASG) CHIP KEC
		Q906	0TR103009AA	CHIP KRC103S-T1(NC)22-22 KEC
		Q907	0TR387609AA	CHIP KTC3876-0-T1(WO) KEC
		Q908	0TR103009AA	CHIP KRC103S-T1(NC)22-22 KEC
SENSOR				
		ICP04	657-060C	CQY80NG PHOTO-COUPLER TELEFUN

CAUTION: The * marks in the parts list designate components which have special characteristics important for safety and should be replaced only with types identical to those in the original circuit or specified in the parts list. Before replacing any of these components, read carefully the SAFETY PRECAUTIONS and SERVICING PRECAUTIONS in the manual. Do not degrade the safety of the unit through improper servicing.

Tolerance

Symbol	C	J	K	M	N	Z	P	A
%	±2	±5	±10	±20	±30	+80 -20	+100 -10	+100 -10

CC, CJ, CK: Capacitor, Ceramic
CE: Capacitor, Electrolytic
CQ: Capacitor, Polyester

S	AL	LOCA.NO	PART NO(GS)	SPECIFICATION
		RESISTOR		
		R001	0RD0752F608	75 1/6W 5 TA26
		R002	0RD0752F608	75 1/6W 5 TA26
		R003	0RD0562F608	56 1/6W 5 TA26
		R004	0RD3902F608	39K 1/6W 5 TA26
		R006	0RD8200F608	820 1/6W 5 TA26
		R008	0RD5600F608	560 1/6W 5 TA26
		R009	0RD6800F608	680 1/6W 5 TA26
		R011	0RD1002F608	10K 1/6W 5 TA26
		R012	0RD2702F608	27K 1/6W 5 TA26
		R013	0RD8200F608	820 1/6W 5 TA26
		R014	0RD2202F608	22K 1/6W 5 TA26
		R015	0RD2202F608	22K 1/6W 5 TA26
		R016	0RD4700F608	470 1/6W 5 TA26
		R017	0RD1501F608	1.5K 1/6W 5 TA26
		R018	0RD4700F608	470 1/6W 5 TA26
		R019	0RD6800F608	680 1/6W 5 TA26
		R020	0RD2200F608	220 1/6W 5 TA26
		R021	0RD8200F608	820 1/6W 5 TA26
		R023	0RD1501F608	1.5K 1/6W 5 TA26
		R024	0RD3301F608	3.3K 1/6W 5 TA26
		R025	0RD1801F608	1.8K 1/6W 5 TA26
		R026	0RD1001F608	1.0K 1/6W 5 TA26
		R027	0RD8200F608	820 1/6W 5 TA26
		R028	0RD2202F608	22K 1/6W 5 TA26
		R029	0RD2202F608	22K 1/6W 5 TA26
		R030	0RD2200F608	220 1/6W 5 TA26
		R032	0RD1201F608	1.2K 1/6W 5 TA26
		R033	0RD6800F608	680 1/6W 5 TA26
		R034	0RD2701F608	2.7K 1/6W 5 TA26
		R035	0RD1002F608	10K 1/6W 5 TA26
		R036	0RD1001F608	1.0K 1/6W 5 TA26
		R037	0RD4700F608	470 1/6W 5 TA26
		R038	0RD1001F608	1.0K 1/6W 5 TA26
		R039	0RD4700F608	470 1/6W 5 TA26
		R041	0RD1001F608	1.0K 1/6W 5 TA26
		R042	0RD5601F608	5.6K 1/6W 5 TA26
		R043	0RD8200F608	820 1/6W 5 TA26
		R201	0RD1001F608	1.0K 1/6W 5 TA26
		R202	0RD4701F608	4.7K 1/6W 5 TA26
		R203	0RD1001F608	1.0K 1/6W 5 TA26
		R204	0RD2702F608	27K 1/6W 5 TA26
		R205	0RD1202F608	12K 1/6W 5 TA26
		R206	0RD1202F608	12K 1/6W 5 TA26

S	AL	LOCA.NO	PART NO(GS)	SPECIFICATION
		R207	0RD1002F608	10K 1/6W 5 TA26
		R208	0RD6802F608	68K 1/6W 5 TA26
		R209	0RD3301F608	3.3K 1/6W 5 TA26
		R210	0RD1002F608	10K 1/6W 5 TA26
		R211	0RD3302F608	33K 1/6W 5 TA26
		R212	0RD1002F608	10K 1/6W 5 TA26
		R213	0RD1501F608	1.5K 1/6W 5 TA26
		R214	0RD1502F608	15K 1/6W 5 TA26
		R215	0RD6801F608	6.8K 1/6W 5 TA26
		R216	0RD3901F608	3.9K 1/6W 5 TA26
		R217	0RD2703F608	270K 1/6W 5 TA26
		R218	0RD6802F608	68K 1/6W 5 TA26
		R219	0RD2702F608	27K 1/6W 5 TA26
		R220	0RD8203F608	820K 1/6W 5 TA26
		R221	0RD5603F608	560K 1/6W 5 TA26
		R222	0RD8201F608	8.2K 1/6W 5 TA26
		R223	0RD1501F608	1.5K 1/6W 5 TA26
		R224	0RD1503F608	150K 1/6W 5 TA26
		R225	0RD1503F608	150K 1/6W 5 TA26
		R226	0RD2203F608	220K 1/6W 5 TA26
		R227	0RD6802F608	68K 1/6W 5 TA26
		R228	0RD6802F608	68K 1/6W 5 TA26
		R229	0RD4701F608	4.7K 1/6W 5 TA26
		R230	0RD4701F608	4.7K 1/6W 5 TA26
		R231	0RD5601F608	5.6K 1/6W 5 TA26
		R232	0RD0101F608	1.0 1/6W 5 TA26
		R233	0RD5601F608	5.6K 1/6W 5 TA26
		R234	0RD3902F608	39K 1/6W 5 TA26
		R235	0RD2701F608	2.7K 1/6W 5 TA26
		R236	0RD6803F608	680K 1/6W 5 TA26
		R237	0RD2702F608	27K 1/6W 5 TA26
		R238	0RD4702F608	47K 1/6W 5 TA26
		R239	0RD8201F608	8.2K 1/6W 5 TA26
		R240	0RD1003F608	100K 1/6W 5 TA26
		R241	0RD1503F608	150K 1/6W 5 TA26
		R242	0RD8202F608	82K 1/6W 5 TA26
		R243	0RD1503F608	150K 1/6W 5 TA26
		R244	0RD1003F608	100K 1/6W 5 TA26
		R245	0RD0101F608	1.0 1/6W 5 TA26
		R246	0RD1001F608	1.0K 1/6W 5 TA26
		R247	0RD8203F608	820K 1/6W 5 TA26
		R248	0RD1202F608	12K 1/6W 5 TA26
		R249	0RD1201F608	1.2K 1/6W 5 TA26
		R250	0RD5601F608	5.6K 1/6W 5 TA26
		R251	0RD4700F608	470 1/6W 5 TA26

S	AL	LOCA.NO	PART NO(GS)	SPECIFICATION
		R252	614-011B	PRW 3.3/2W 10MM FORM/BULK SUNG
		R253	0RD1001F608	1.0K 1/6W 5 TA26
		R254	0RD2201F608	2.2K 1/6W 5 TA26
		R255	0RD4701F608	4.7K 1/6W 5 TA26
		R256	0RD1001F608	1.0K 1/6W 5 TA26
		R264	0RD2201F608	2.2K 1/6W 5 TA26
		R267	0RD1004F608	1.0M 1/6W 5 TA26
		R268	0RD1003F608	100K 1/6W 5 TA26
		R269	0RD4704F608	4.7M 1/6W 5 TA26
		R270	0RD1002F608	10K 1/6W 5 TA26
		R271	0RD2201F608	2.2K 1/6W 5 TA26
		R272	0RD4701F608	4.7K 1/6W 5 TA26
		R273	0RD1502F608	15K 1/6W 5 TA26
		R274	0RD4701F608	4.7K 1/6W 5 TA26
		R275	0RD4701F608	4.7K 1/6W 5 TA26
		R276	0RD4701F608	4.7K 1/6W 5 TA26
		R277	0RD2702F608	27K 1/6W 5 TA26
		R278	0RD2702F608	27K 1/6W 5 TA26
		R279	0RD1002F608	10K 1/6W 5 TA26
		R280	0RD1002F608	10K 1/6W 5 TA26
		R281	0RD3302F608	33K 1/6W 5 TA26
		R282	0RD3302F608	33K 1/6W 5 TA26
		R283	0RD6802F608	68K 1/6W 5 TA26
		R284	0RD2201F608	2.2K 1/6W 5 TA26
		R285	0RD2201F608	2.2K 1/6W 5 TA26
		R286	0RD4701F608	4.7K 1/6W 5 TA26
		R287	0RD4701F608	4.7K 1/6W 5 TA26
		R288	0RD4701F608	4.7K 1/6W 5 TA26
		R289	0RD4700F608	470 1/6W 5 TA26
		R290	0RD4701F608	4.7K 1/6W 5 TA26
		R291	0RD4701F608	4.7K 1/6W 5 TA26
		R292	0RD4701F608	4.7K 1/6W 5 TA26
		R293	0RD4701F608	4.7K 1/6W 5 TA26
		R294	0RD4701F608	4.7K 1/6W 5 TA26
		R295	0RD4701F608	4.7K 1/6W 5 TA26
		R296	0RD4701F608	4.7K 1/6W 5 TA26
		R297	0RD1001F608	1.0K 1/6W 5 TA26
		R298	0RD4701F608	4.7K 1/6W 5 TA26
		R299	0RD1001F608	1.0K 1/6W 5 TA26
		R2A1	0RD4701F608	4.7K 1/6W 5 TA26
		R2A2	0RD6802F608	68K 1/6W 5 TA26
		R2A3	0RD6802F608	68K 1/6W 5 TA26
		R2A7	0RD2201F608	2.2K 1/6W 5 TA26
		R2A8	0RD4701F608	4.7K 1/6W 5 TA26
		R2A9	0RD4701F608	4.7K 1/6W 5 TA26
		R2B3	0RD2702F608	27K 1/6W 5 TA26
		R2B5	0RD6802F608	68K 1/6W 5 TA26
		R2B6	0RD6802F608	68K 1/6W 5 TA26
		R2B8	0RD6802F608	68K 1/6W 5 TA26
		R2B9	0RD6802F608	68K 1/6W 5 TA26
		R2C3	0RD4701F608	4.7K 1/6W 5 TA26
		R2C4	0RD4701F608	4.7K 1/6W 5 TA26
		R2D1	0RD1001F608	1.0K 1/6W 5 TA26
		R2D2	0RD1001F608	1.0K 1/6W 5 TA26
		R2D3	0RD2702F608	27K 1/6W 5 TA26
		R2D4	0RD1001F608	1.0K 1/6W 5 TA26
		R2D5	0RD1001F608	1.0K 1/6W 5 TA26
		R2D7	0RD1003F608	100K 1/6W 5 TA26
		R2D8	0RD1004F608	1.0M 1/6W 5 TA26
		R2D9	0RD6801F608	6.8K 1/6W 5 TA26
		R2E1	0RD1204F608	1.2M 1/6W 5 TA26
		R2E2	0RD1204F608	1.2M 1/6W 5 TA26

S	AL	LOCA.NO	PART NO(GS)	SPECIFICATION
		R2E3	0RD6801F608	6.8K 1/6W 5 TA26
		R2E5	0RD3902F608	39K 1/6W 5 TA26
		R2E8	0RD4702F608	47K 1/6W 5 TA26
		R301	0RD4701F608	4.7K 1/6W 5 TA26
		R302	0RD3302F608	33K 1/6W 5 TA26
		R303	0RD1001F608	1.0K 1/6W 5 TA26
		R304	0RD1802F608	18K 1/6W 5 TA26
		R306	0RD3302F608	33K 1/6W 5 TA26
		R307	0RD1802F608	18K 1/6W 5 TA26
		R308	0RD1001F608	1.0K 1/6W 5 TA26
		R309	0RD0102F608	10 1/6W 5 TA26
		R311	0RD2701F608	2.7K 1/6W 5 TA26
		R312	0RD6801F608	6.8K 1/6W 5 TA26
		R313	0RD2200F608	220 1/6W 5 TA26
		R315	0RD4701F608	4.7K 1/6W 5 TA26
		R316	0RD1002F608	10K 1/6W 5 TA26
		R317	0RD1002F608	10K 1/6W 5 TA26
		R318	0RD1001F608	1.0K 1/6W 5 TA26
		R319	0RD1001F608	1.0K 1/6W 5 TA26
		R320	0RD4701F608	4.7K 1/6W 5 TA26
		R321	0RD1001F608	1.0K 1/6W 5 TA26
		R322	0RD7500F608	750 1/6W 5 TA26
		R323	0RD1001F608	1.0K 1/6W 5 TA26
		R324	0RD4702F608	47K 1/6W 5 TA26
		R325	0RD4702F608	47K 1/6W 5 TA26
		R326	0RD1001F608	1.0K 1/6W 5 TA26
		R327	0RD4700F608	470 1/6W 5 TA26
		R328	0RD1802F608	18K 1/6W 5 TA26
		R329	0RD4701F608	4.7K 1/6W 5 TA26
		R331	0RD1201F608	1.2K 1/6W 5 TA26
		R332	0RD1001F608	1.0K 1/6W 5 TA26
		R333	0RD5600F608	560 1/6W 5 TA26
		R334	0RD1001F608	1.0K 1/6W 5 TA26
		R336	0RD1200F608	120 1/6W 5 TA26
		R337	0RD2201F608	2.2K 1/6W 5 TA26
		R340	0RD1501F608	1.5K 1/6W 5 TA26
		R342	0RD2702F608	27K 1/6W 5 TA26
		R343	0RD1501F608	1.5K 1/6W 5 TA26
		R344	0RD2001F608	2.0K 1/6W 5 TA26
		R345	0RD8200F608	820 1/6W 5 TA26
		R346	0RD1801F608	1.8K 1/6W 5 TA26
		R347	0RD8202F608	82K 1/6W 5 TA26
		R350	0RD1201F608	1.2K 1/6W 5 TA26
		R351	0RD1802F608	18K 1/6W 5 TA26
		R352	0RD3302F608	33K 1/6W 5 TA26
		R353	0RD1002F608	10K 1/6W 5 TA26
		R354	0RD1002F608	10K 1/6W 5 TA26
		R355	0RD5601F608	5.6K 1/6W 5 TA26
		R359	0RD1001F608	1.0K 1/6W 5 TA26
		R361	0RD3901F608	3.9K 1/6W 5 TA26
		R362	0RD3301F608	3.3K 1/6W 5 TA26
		R379	0RD2701F608	2.7K 1/6W 5 TA26
		R382	0RD7500F608	750 1/6W 5 TA26
		R383	0RD2201F608	2.2K 1/6W 5 TA26
		R384	0RD2201F608	2.2K 1/6W 5 TA26
		R385	0RD3900F608	390 1/6W 5 TA26
		R386	0RD3900F608	390 1/6W 5 TA26
		R387	0RD1001F608	1.0K 1/6W 5 TA26
		R388	0RD5601F608	5.6K 1/6W 5 TA26
		R389	0RD2201F608	2.2K 1/6W 5 TA26
		R390	0RD1001F608	1.0K 1/6W 5 TA26
		R391	0RD5600F608	560 1/6W 5 TA26

S	AL	LOCA.NO	PART NO(GS)	SPECIFICATION
		R392	0RD3900F608	390 1/6W 5 TA26
		R393	0RD2200F608	220 1/6W 5 TA26
		R395	0RD1201F608	1.2K 1/6W 5 TA26
		R396	0RD1801F608	1.8K 1/6W 5 TA26
		R397	0RD4700F608	470 1/6W 5 TA26
		R398	0RD8200F608	820 1/6W 5 TA26
		R3A1	0RD1802F608	18K 1/6W 5 TA26
		R3A2	0RD1802F608	18K 1/6W 5 TA26
		R3A3	0RD4701F608	4.7K 1/6W 5 TA26
		R3A4	0RD1501F608	1.5K 1/6W 5 TA26
		R3A5	0RD1001F608	1.0K 1/6W 5 TA26
		R3A6	0RD1001F608	1.0K 1/6W 5 TA26
		R3A7	0RD1001F608	1.0K 1/6W 5 TA26
		R3A8	0RD6802F608	68K 1/6W 5 TA26
		R3A9	0RD6802F608	68K 1/6W 5 TA26
		R3B0	0RD6802F608	68K 1/6W 5 TA26
		R3B1	0RD3302F608	33K 1/6W 5 TA26
		R3B2	0RD2700F608	270 1/6W 5 TA26
		R3B3	0RD1001F608	1.0K 1/6W 5 TA26
		R3B4	0RD1004F608	1.0M 1/6W 5 TA26
		R3B5	0RD4700F608	470 1/6W 5 TA26
		R3B6	0RD2700F608	270 1/6W 5 TA26
		R3B7	0RD1802F608	18K 1/6W 5 TA26
		R3B8	0RD1802F608	18K 1/6W 5 TA26
		R3B9	0RD3302F608	33K 1/6W 5 TA26
		R3C0	0RD4701F608	4.7K 1/6W 5 TA26
		R3C1	0RD4701F608	4.7K 1/6W 5 TA26
		R3C2	0RD4701F608	4.7K 1/6W 5 TA26
		R3C3	0RD2201F608	2.2K 1/6W 5 TA26
		R3C4	0RD1001F608	1.0K 1/6W 5 TA26
		R3C6	0RD2201F608	2.2K 1/6W 5 TA26
		R3C7	0RD2201F608	2.2K 1/6W 5 TA26
		R3C9	0RD1002F608	10K 1/6W 5 TA26
		R3E0	0RD5600F608	560 1/6W 5 TA26
		R3E1	0RD1002F608	10K 1/6W 5 TA26
		R3E2	0RD4701F608	4.7K 1/6W 5 TA26
		R3E3	0RD3302F608	33K 1/6W 5 TA26
		R3E4	0RD1003F608	100K 1/6W 5 TA26
		R3E5	0RD2203F608	220K 1/6W 5 TA26
		R3E6	0RD4703F608	470K 1/6W 5 TA26
		R3E7	0RD2201F608	2.2K 1/6W 5 TA26
		R3E8	0RD4700F608	470 1/6W 5 TA26
		R3E9	0RD1003F608	100K 1/6W 5 TA26
		R3F0	0RD1003F608	100K 1/6W 5 TA26
		R3F1	0RD2202F608	22K 1/6W 5 TA26
		R3F2	0RD3301F608	3.3K 1/6W 5 TA26
		R3F3	0RD1801F608	1.8K 1/6W 5 TA26
		R3F4	0RD4700F608	470 1/6W 5 TA26
		R3F5	0RD1200F608	120 1/6W 5 TA26
		R3F6	0RD4700F608	470 1/6W 5 TA26
		R3F7	0RD3301F608	3.3K 1/6W 5 TA26
		R3F8	0RD1002F608	10K 1/6W 5 TA26
		R3F9	0RD1002F608	10K 1/6W 5 TA26
		R3G0	0RD8200F608	820 1/6W 5 TA26
		R3G1	0RD1201F608	1.2K 1/6W 5 TA26
		R3G2	0RD6801F608	6.8K 1/6W 5 TA26
		R3G4	0RD3301F608	3.3K 1/6W 5 TA26
		R3G6	0RD2201F608	2.2K 1/6W 5 TA26
		R3K1	0RD4701F608	4.7K 1/6W 5 TA26
		R3K2	0RD1501F608	1.5K 1/6W 5 TA26
		R3K3	0RD1001F608	1.0K 1/6W 5 TA26
		R3K4	0RD6800F608	680 1/6W 5 TA26

S	AL	LOCA.NO	PART NO(GS)	SPECIFICATION
		R401	0RD1002F608	10K 1/6W 5 TA26
		R402	0RD1002F608	10K 1/6W 5 TA26
		R403	0RD2702F608	27K 1/6W 5 TA26
		R404	0RD1001F608	1.0K 1/6W 5 TA26
		R405	0RD8202F608	82K 1/6W 5 TA26
		R406	0RD2201F608	2.2K 1/6W 5 TA26
		R407	0RD2202F608	22K 1/6W 5 TA26
		R408	0RD2203F608	220K 1/6W 5 TA26
		R409	0RD1201F608	1.2K 1/6W 5 TA26
		R40A	0RD1201F608	1.2K 1/6W 5 TA26
		R40B	0RD1001F608	1.0K 1/6W 5 TA26
		R410	0RD1001F608	1.0K 1/6W 5 TA26
		R411	0RD4700F608	470 1/6W 5 TA26
		R412	0RD1001F608	1.0K 1/6W 5 TA26
		R413	0RD1001F608	1.0K 1/6W 5 TA26
		R414	0RD1201F608	1.2K 1/6W 5 TA26
		R415	0RD2203F608	220K 1/6W 5 TA26
		R416	0RD2202F608	22K 1/6W 5 TA26
		R417	0RD2702F608	27K 1/6W 5 TA26
		R418	0RD1502F608	15K 1/6W 5 TA26
		R419	0RD3303F608	330K 1/6W 5 TA26
		R420	0RD1502F608	15K 1/6W 5 TA26
		R421	0RD1002F608	10K 1/6W 5 TA26
		R422	0RD1001F608	1.0K 1/6W 5 TA26
		R423	0RD3901F608	3.9K 1/6W 5 TA26
		R424	0RD1001F608	1.0K 1/6W 5 TA26
		R425	0RD3901F608	3.9K 1/6W 5 TA26
		R426	0RD1002F608	10K 1/6W 5 TA26
		R427	0RD2201F608	2.2K 1/6W 5 TA26
		R428	0RD2200F608	220 1/6W 5 TA26
		R429	0RD2200F608	220 1/6W 5 TA26
		R430	0RD2201F608	2.2K 1/6W 5 TA26
		R431	0RD2202F608	22K 1/6W 5 TA26
		R432	0RD1802F608	18K 1/6W 5 TA26
		R433	0RD2201F608	2.2K 1/6W 5 TA26
		R434	0RD2202F608	22K 1/6W 5 TA26
		R435	0RD2202F608	22K 1/6W 5 TA26
		R436	0RD5601F608	5.6K 1/6W 5 TA26
		R437	0RD6800F608	680 1/6W 5 TA26
		R438	0RD4703F608	470K 1/6W 5 TA26
		R439	0RD2201F608	2.2K 1/6W 5 TA26
		R440	0RD1802F608	18K 1/6W 5 TA26
		R441	0RD2201F608	2.2K 1/6W 5 TA26
		R442	0RD2202F608	22K 1/6W 5 TA26
		R443	0RD1201F608	1.2K 1/6W 5 TA26
		R444	0RD2701F608	2.7K 1/6W 5 TA26
		R445	0RD1201F608	1.2K 1/6W 5 TA26
		R446	0RD2701F608	2.7K 1/6W 5 TA26
		R447	0RD4700F608	470 1/6W 5 TA26
		R448	0RD1002F608	10K 1/6W 5 TA26
		R449	0RD1002F608	10K 1/6W 5 TA26
		R450	0RD1202F608	12K 1/6W 5 TA26
		R451	0RD0102F608	10 1/6W 5 TA26
		R452	0RD0102F608	10 1/6W 5 TA26
		R453	0RD4702F608	47K 1/6W 5 TA26
		R454	0RD1003F608	100K 1/6W 5 TA26
		R455	0RD3900F608	390 1/6W 5 TA26
		R456	0RD1002F608	10K 1/6W 5 TA26
		R457	0RD2702F608	27K 1/6W 5 TA26
		R458	0RD0472F608	47 1/6W 5 TA26
		R459	0RD0472F608	47 1/6W 5 TA26
		R460	0RD2702F608	27K 1/6W 5 TA26

S	AL	LOCA.NO	PART NO(GS)	SPECIFICATION
		R461	0RD2701F608	2.7K 1/6W 5 TA26
		R462	0RD2701F608	2.7K 1/6W 5 TA26
		R463	0RD2202F608	22K 1/6W 5 TA26
		R464	0RD6800F608	680 1/6W 5 TA26
		R465	0RD5602F608	56K 1/6W 5 TA26
		R466	0RD6801F608	6.8K 1/6W 5 TA26
		R467	0RD1001F608	1.0K 1/6W 5 TA26
		R468	0RD1004F608	1.0M 1/6W 5 TA26
		R469	0RD6801F608	6.8K 1/6W 5 TA26
		R470	0RD1202F608	12K 1/6W 5 TA26
		R471	0RD1001F608	1.0K 1/6W 5 TA26
		R472	0RD1500F608	150 1/6W 5 TA26
		R473	0RD0102F608	10 1/6W 5 TA26
		R474	0RD3902F608	39K 1/6W 5 TA26
		R475	0RD6801F608	6.8K 1/6W 5 TA26
		R476	0RD4702F608	47K 1/6W 5 TA26
		R478	0RD4702F608	47K 1/6W 5 TA26
		R479	0RD4700F608	470 1/6W 5 TA26
		R480	0RD4702F608	47K 1/6W 5 TA26
		R482	0RD4702F608	47K 1/6W 5 TA26
		R484	0RD3902F608	39K 1/6W 5 TA26
		R485	0RD5601F608	5.6K 1/6W 5 TA26
		R486	0RD3902F608	39K 1/6W 5 TA26
		R487	0RD2201F608	2.2K 1/6W 5 TA26
		R488	0RD1001F608	1.0K 1/6W 5 TA26
		R489	0RD1001F608	1.0K 1/6W 5 TA26
		R490	0RD1001F608	1.0K 1/6W 5 TA26
		R491	0RD1001F608	1.0K 1/6W 5 TA26
		R492	0RD1001F608	1.0K 1/6W 5 TA26
		R494	0RD5602F608	56K 1/6W 5 TA26
		R495	0RD2201F608	2.2K 1/6W 5 TA26
		R496	0RD1001F608	1.0K 1/6W 5 TA26
		R497	0RD5602F608	56K 1/6W 5 TA26
		R498	0RD2701F608	2.7K 1/6W 5 TA26
		R499	0RD1002F608	10K 1/6W 5 TA26
		R4A0	0RD1802F608	18K 1/6W 5 TA26
		R4A1	0RD3302F608	33K 1/6W 5 TA26
		R4A2	0RD4700F608	470 1/6W 5 TA26
		R4A3	0RD8200F608	820 1/6W 5 TA26
		R4A4	0RD1001F608	1.0K 1/6W 5 TA26
		R4A5	0RD1001F608	1.0K 1/6W 5 TA26
		R4A6	0RD4701F608	4.7K 1/6W 5 TA26
		R4A7	0RD1001F608	1.0K 1/6W 5 TA26
		R4A8	0RD4702F608	47K 1/6W 5 TA26
		R4A9	0RD1002F608	10K 1/6W 5 TA26
		R4B0	0RD1501F608	1.5K 1/6W 5 TA26
		R4B1	0RD1801F608	1.8K 1/6W 5 TA26
		R4B2	0RD2201F608	2.2K 1/6W 5 TA26
		R4B3	0RD6800F608	680 1/6W 5 TA26
		R4B4	0RD4701F608	4.7K 1/6W 5 TA26
		R4B5	0RD4701F608	4.7K 1/6W 5 TA26
		R4B6	0RD6800F608	680 1/6W 5 TA26
		R4B7	0RD2201F608	2.2K 1/6W 5 TA26
		R4B8	0RD1501F608	1.5K 1/6W 5 TA26
		R4B9	0RD1801F608	1.8K 1/6W 5 TA26
		R4C0	0RD1002F608	10K 1/6W 5 TA26
		R4C1	0RD4702F608	47K 1/6W 5 TA26
		R4C3	0RD1001F608	1.0K 1/6W 5 TA26
		R4C4	0RD1001F608	1.0K 1/6W 5 TA26
		R4C5	0RD3302F608	33K 1/6W 5 TA26
		R4C6	0RD1503F608	150K 1/6W 5 TA26
		R4C7	0RD1503F608	150K 1/6W 5 TA26

S	AL	LOCA.NO	PART NO(GS)	SPECIFICATION
		R4C8	0RD2203F608	220K 1/6W 5 TA26
		R4C9	0RD2203F608	220K 1/6W 5 TA26
		R501	0RD4701F608	4.7K 1/6W 5 TA26
		R502	0RD1503F608	150K 1/6W 5 TA26
		R503	0RD1503F608	150K 1/6W 5 TA26
		R504	0RD1002F608	10K 1/6W 5 TA26
		R505	0RD1002F608	10K 1/6W 5 TA26
		R506	0RD1003F608	100K 1/6W 5 TA26
		R507	0RD1003F608	100K 1/6W 5 TA26
		R508	0RD1003F608	100K 1/6W 5 TA26
		R509	0RD1003F608	100K 1/6W 5 TA26
		R510	0RD1003F608	100K 1/6W 5 TA26
		R511	0RD1003F608	100K 1/6W 5 TA26
		R512	0RD1003F608	100K 1/6W 5 TA26
		R513	0RD2201F608	2.2K 1/6W 5 TA26
		R514	0RD2201F608	2.2K 1/6W 5 TA26
		R515	0RD1003F608	100K 1/6W 5 TA26
		R516	0RD1003F608	100K 1/6W 5 TA26
		R517	0RD1003F608	100K 1/6W 5 TA26
		R518	0RD1003F608	100K 1/6W 5 TA26
		R519	0RD1003F608	100K 1/6W 5 TA26
		R520	0RD1003F608	100K 1/6W 5 TA26
		R521	0RD1800F608	180 1/6W 5 TA26
		R522	0RD1800F608	180 1/6W 5 TA26
		R523	0RD4702F608	47K 1/6W 5 TA26
		R524	0RD4701F608	4.7K 1/6W 5 TA26
		R525	0RD4701F608	4.7K 1/6W 5 TA26
		R526	0RD1002F608	10K 1/6W 5 TA26
		R527	0RD4701F608	4.7K 1/6W 5 TA26
		R528	0RD4701F608	4.7K 1/6W 5 TA26
		R529	0RD1002F608	10K 1/6W 5 TA26
		R530	0RD1002F608	10K 1/6W 5 TA26
		R531	0RD1802F608	18K 1/6W 5 TA26
		R532	0RD1802F608	18K 1/6W 5 TA26
		R533	0RD8203F608	820K 1/6W 5 TA26
		R534	0RD8203F608	820K 1/6W 5 TA26
		R535	0RD4701F608	4.7K 1/6W 5 TA26
		R536	0RD4702F608	47K 1/6W 5 TA26
		R537	0RD1004F608	1.0M 1/6W 5 TA26
		R538	0RD1204F608	1.2M 1/6W 5 TA26
		R539	0RD1501F608	1.5K 1/6W 5 TA26
		R541	0RD0221F608	2.2 1/6W 5 TA26
		R542	0RD0221F608	2.2 1/6W 5 TA26
		R543	0RD0221F608	2.2 1/6W 5 TA26
		R544	0RD1003F608	100K 1/6W 5 TA26
		R545	0RD5601F608	5.6K 1/6W 5 TA26
		R546	0RD6800F608	680 1/6W 5 TA26
		R547	0RD1002F608	10K 1/6W 5 TA26
		R548	0RD1002F608	10K 1/6W 5 TA26
		R549	0RD4700F608	470 1/6W 5 TA26
		R550	0RD1002F608	10K 1/6W 5 TA26
		R551	0RD1002F608	10K 1/6W 5 TA26
		R552	0RD1002F608	10K 1/6W 5 TA26
		R553	0RD2201F608	2.2K 1/6W 5 TA26
		R554	0RD3301F608	3.3K 1/6W 5 TA26
		R555	0RD4701F608	4.7K 1/6W 5 TA26
		R556	0RD2202F608	22K 1/6W 5 TA26
		R557	0RD0101F608	1.0 1/6W 5 TA26
		R558	0RD0101F608	1.0 1/6W 5 TA26
		R559	0RD0101F608	1.0 1/6W 5 TA26
		R560	0RD0101F608	1.0 1/6W 5 TA26
		R561	0RD1002F608	10K 1/6W 5 TA26

RUN DATE : 95.09.27

S	AL	LOCA.NO	PART NO(GS)	SPECIFICATION
		R562	0RD3300F608	330 1/6W 5 TA26
		R563	0RD1002F608	10K 1/6W 5 TA26
		R564	0RD1002F608	10K 1/6W 5 TA26
		R565	0RD2701F608	2.7K 1/6W 5 TA26
		R566	0RD1003F608	100K 1/6W 5 TA26
		R567	0RD1002F608	10K 1/6W 5 TA26
		R568	0RD1002F608	10K 1/6W 5 TA26
		R569	0RD1002F608	10K 1/6W 5 TA26
		R570	0RD4700F608	470 1/6W 5 TA26
		R571	0RD1002F608	10K 1/6W 5 TA26
		R572	0RD1002F608	10K 1/6W 5 TA26
		R573	0RD1002F608	10K 1/6W 5 TA26
		R574	0RD2702F608	27K 1/6W 5 TA26
		R575	0RD2702F608	27K 1/6W 5 TA26
		R576	0RD2702F608	27K 1/6W 5 TA26
		R577	0RD3302F608	33K 1/6W 5 TA26
		R578	0RD2202F608	22K 1/6W 5 TA26
		R579	0RD6800F608	680 1/6W 5 TA26
		R580	0RD1001F608	1.0K 1/6W 5 TA26
		R581	0RD3900F608	390 1/6W 5 TA26
		R582	0RD1004F608	1.0M 1/6W 5 TA26
		R583	0RD4701F608	4.7K 1/6W 5 TA26
		R584	0RD4701F608	4.7K 1/6W 5 TA26
		R585	0RD4701F608	4.7K 1/6W 5 TA26
		R586	0RD4701F608	4.7K 1/6W 5 TA26
		R587	0RD4701F608	4.7K 1/6W 5 TA26
		R588	0RD3301F608	3.3K 1/6W 5 TA26
		R589	0RD1202F608	12K 1/6W 5 TA26
		R590	0RD2202F608	22K 1/6W 5 TA26
		R591	0RD1003F608	100K 1/6W 5 TA26
		R592	0RD1001F608	1.0K 1/6W 5 TA26
		R593	0RD0562F608	56 1/6W 5 TA26
		R594	0RD1001F608	1.0K 1/6W 5 TA26
		R595	0RD4701F608	4.7K 1/6W 5 TA26
		R596	0RD2202F608	22K 1/6W 5 TA26
		R597	0RD2202F608	22K 1/6W 5 TA26
		R598	0RD2201F608	2.2K 1/6W 5 TA26
		R599	0RD4703F608	470K 1/6W 5 TA26
		R5A1	0RD8203F608	820K 1/6W 5 TA26
		R5A2	0RD6803F608	680K 1/6W 5 TA26
		R5A3	0RD1800F608	180 1/6W 5 TA26
		R5A4	0RD1002F608	10K 1/6W 5 TA26
		R5A5	0RD1002F608	10K 1/6W 5 TA26
		R5A6	0RD4701F608	4.7K 1/6W 5 TA26
		R5A7	0RD4701F608	4.7K 1/6W 5 TA26
		R5A8	0RD4701F608	4.7K 1/6W 5 TA26
		R5A9	0RD4701F608	4.7K 1/6W 5 TA26
		R601	0RD3300F608	330 1/6W 5 TA26
		R602	0RD3900F608	390 1/6W 5 TA26
		R603	0RD4700F608	470 1/6W 5 TA26
		R604	0RD6800F608	680 1/6W 5 TA26
		R605	0RD1001F608	1.0K 1/6W 5 TA26
		R606	0RD1501F608	1.5K 1/6W 5 TA26
		R607	0RD4701F608	4.7K 1/6W 5 TA26
		R608	0RD4701F608	4.7K 1/6W 5 TA26
		R609	0RD4701F608	4.7K 1/6W 5 TA26
		R610	0RD3302F608	33K 1/6W 5 TA26
		R611	0RD1200F608	120 1/6W 5 TA26
		R612	0RD4700F608	470 1/6W 5 TA26
		R613	0RD5600F608	560 1/6W 5 TA26
		R614	0RD5600F608	560 1/6W 5 TA26
		R615	0RD0471F608	4.7 1/6W 5 TA26

S	AL	LOCA.NO	PART NO(GS)	SPECIFICATION
		R616	0RD2203F608	220K 1/6W 5 TA26
		R617	0RD2203F608	220K 1/6W 5 TA26
		R618	0RD2203F608	220K 1/6W 5 TA26
		R619	0RD1501F608	1.5K 1/6W 5 TA26
		R620	0RD8202F608	82K 1/6W 5 TA26
		R621	0RD2203F608	220K 1/6W 5 TA26
		R623	0RD8202F608	82K 1/6W 5 TA26
		R627	0RD3902F608	39K 1/6W 5 TA26
		R628	0RD1203F608	120K 1/6W 5 TA26
		R629	0RD1203F608	120K 1/6W 5 TA26
		R630	0RD3902F608	39K 1/6W 5 TA26
		R631	0RD8200F608	820 1/6W 5 TA26
		R632	0RD8200F608	820 1/6W 5 TA26
		R635	0RD1501F608	1.5K 1/6W 5 TA26
		R636	0RD1001F608	1.0K 1/6W 5 TA26
		R637	0RD1002F608	10K 1/6W 5 TA26
		R6A0	0RD2200F608	220 1/6W 5 TA26
		R6A1	0RD3300F608	330 1/6W 5 TA26
		R6A2	0RD3900F608	390 1/6W 5 TA26
		R6A3	0RD4700F608	470 1/6W 5 TA26
		R6A4	0RD6800F608	680 1/6W 5 TA26
		R6A5	0RD1001F608	1.0K 1/6W 5 TA26
		R6A6	0RD1501F608	1.5K 1/6W 5 TA26
		R6A7	0RD2201F608	2.2K 1/6W 5 TA26
		R6A8	0RD3301F608	3.3K 1/6W 5 TA26
		R6A9	0RD5601F608	5.6K 1/6W 5 TA26
		R6B1	0RD1201F608	1.2K 1/6W 5 TA26
		R701	0RD1000F608	100 1/6W 5 TA26
		R702	0RD4701F608	4.7K 1/6W 5 TA26
		R703	0RD1001F608	1.0K 1/6W 5 TA26
		R704	0RD1001F608	1.0K 1/6W 5 TA26
		R705	0RD1000F608	100 1/6W 5 TA26
		R706	0RD2701F608	2.7K 1/6W 5 TA26
		R707	0RD1001F608	1.0K 1/6W 5 TA26
		R708	0RD2700F608	270 1/6W 5 TA26
		R710	0RD1802F608	18K 1/6W 5 TA26
		R711	0RD1002F608	10K 1/6W 5 TA26
		R712	0RD1001F608	1.0K 1/6W 5 TA26
		R714	0RD2700F608	270 1/6W 5 TA26
		R715	0RD3300F608	330 1/6W 5 TA26
		R716	0RD1001F608	1.0K 1/6W 5 TA26
		R717	0RD2200F608	220 1/6W 5 TA26
		R729	0RD2201F608	2.2K 1/6W 5 TA26
		R730	0RD2201F608	2.2K 1/6W 5 TA26
		R731	0RD1000F608	100 1/6W 5 TA26
		R732	0RD5601F608	5.6K 1/6W 5 TA26
		R733	0RD1001F608	1.0K 1/6W 5 TA26
		R734	0RD1000F608	100 1/6W 5 TA26
		R735	0RD5601F608	5.6K 1/6W 5 TA26
		R736	0RD1001F608	1.0K 1/6W 5 TA26
		R737	0RD4700F608	470 1/6W 5 TA26
		R738	0RD2701F608	2.7K 1/6W 5 TA26
		R739	0RD1001F608	1.0K 1/6W 5 TA26
		R744	0RD2702F608	27K 1/6W 5 TA26
		R745	0RD1802F608	18K 1/6W 5 TA26
		R746	0RD1001F608	1.0K 1/6W 5 TA26
		R747	0RD1001F608	1.0K 1/6W 5 TA26
		R801	0RD1203F608	120K 1/6W 5 TA26
		R802	0RD5601F608	5.6K 1/6W 5 TA26
		R803	0RD8201F608	8.2K 1/6W 5 TA26
		R804	0RD3902F608	39K 1/6W 5 TA26
		R805	0RD1002F608	10K 1/6W 5 TA26

S	AL	LOCA.NO	PART NO(GS)	SPECIFICATION
		R806	0RD1202F608	12K 1/6W 5 TA26
		R807	0RD8201F608	8.2K 1/6W 5 TA26
		R808	0RD2201F608	2.2K 1/6W 5 TA26
		R809	0RD1001F608	1.0K 1/6W 5 TA26
		R810	0RD1001F608	1.0K 1/6W 5 TA26
		R811	0RD2200F608	220 1/6W 5 TA26
		R812	0RD4700F608	470 1/6W 5 TA26
		R813	0RD1001F608	1.0K 1/6W 5 TA26
		R814	0RD3302F608	33K 1/6W 5 TA26
		R815	0RD1002F608	10K 1/6W 5 TA26
		R816	0RD4701F608	4.7K 1/6W 5 TA26
		R817	0RD4701F608	4.7K 1/6W 5 TA26
		R818	0RD1003F608	100K 1/6W 5 TA26
		R819	0RD6803F608	680K 1/6W 5 TA26
		R820	0RD1002F608	10K 1/6W 5 TA26
		R821	0RD3900F608	390 1/6W 5 TA26
		R822	0RD1001F608	1.0K 1/6W 5 TA26
		R823	0RD1001F608	1.0K 1/6W 5 TA26
		R824	0RD1001F608	1.0K 1/6W 5 TA26
		R825	0RD4701F608	4.7K 1/6W 5 TA26
		R826	0RD4701F608	4.7K 1/6W 5 TA26
		R831	0RD4703F608	470K 1/6W 5 TA26
		R832	0RD6802F608	68K 1/6W 5 TA26
		R833	0RD4700F608	470 1/6W 5 TA26
		R834	0RD2203F608	220K 1/6W 5 TA26
		R835	0RD3302F608	33K 1/6W 5 TA26
		R836	0RD1001F608	1.0K 1/6W 5 TA26
		R837	0RD4701F608	4.7K 1/6W 5 TA26
		R838	0RD2203F608	220K 1/6W 5 TA26
		R839	0RD2702F608	27K 1/6W 5 TA26
		R840	0RD0752F608	75 1/6W 5 TA26
		R841	0RD0752F608	75 1/6W 5 TA26
		R842	0RD0752F608	75 1/6W 5 TA26
		R843	0RD1001F608	1.0K 1/6W 5 TA26
		R844	0RD1001F608	1.0K 1/6W 5 TA26
		R847	0RD0752F608	75 1/6W 5 TA26
		R848	0RD1001F608	1.0K 1/6W 5 TA26
		R849	0RD1001F608	1.0K 1/6W 5 TA26
		R850	0RD0682F608	68 1/6W 5 TA26
		R851	0RD0752F608	75 1/6W 5 TA26
		R852	0RD1001F608	1.0K 1/6W 5 TA26
		R857	0RD8202F608	82K 1/6W 5 TA26
		R858	0RD8202F608	82K 1/6W 5 TA26
		R859	0RD6802F608	68K 1/6W 5 TA26
		R860	0RD6802F608	68K 1/6W 5 TA26
		R861	0RD5602F608	56K 1/6W 5 TA26
		R862	0RD5602F608	56K 1/6W 5 TA26
		R863	0RD8202F608	82K 1/6W 5 TA26
		R865	0RD8202F608	82K 1/6W 5 TA26
		R867	0RD1203F608	120K 1/6W 5 TA26
		R868	0RD8202F608	82K 1/6W 5 TA26
		R869	0RD5602F608	56K 1/6W 5 TA26
		R870	0RD6802F608	68K 1/6W 5 TA26
		R871	0RD6802F608	68K 1/6W 5 TA26
		R872	0RD5602F608	56K 1/6W 5 TA26
		R873	0RD8202F608	82K 1/6W 5 TA26
		R874	0RD1203F608	120K 1/6W 5 TA26
		R879	0RD3300F608	330 1/6W 5 TA26
		R891	0RD1003F608	100K 1/6W 5 TA26
		R892	0RD0752F608	75 1/6W 5 TA26
		R893	0RD0752F608	75 1/6W 5 TA26
		R894	0RD6800F608	680 1/6W 5 TA26

S	AL	LOCA.NO	PART NO(GS)	SPECIFICATION
		R901	0RH8201D622	8.2K 1/10W 5 D.R/TP
		R902	0RH1000D622	100 1/10W 5 D.R/TP
		R903	0RH8200D622	820 1/10W 5 D.R/TP
		R904	0RH4702D622	47K 1/10W 5 D.R/TP
		R905	0RH1200D622	120 1/10W 5 D.R/TP
		R906	0RH5602D622	56K 1/10W 5 D.R/TP
		R907	0RH3903D622	390K 1/10W 5 D.R/TP
		R908	0RH4703D622	470K 1/10W 5 D.R/TP
		R909	0RH5601D622	5.6K 1/10W 5 D.R/TP
		R910	0RD0752F608	75 1/6W 5 TA26
		R911	0RH0752D622	75 1/10W 5 D.R/TP
		R912	0RH0752D622	75 1/10W 5 D.R/TP
		R913	0RH0752D622	75 1/10W 5 D.R/TP
		R914	0RH1002D622	10K 1/10W 5 D.R/TP
		R915	0RH4701D622	4.7K 1/10W 5 D.R/TP
		R916	0RH0102D622	10 1/10W 5 D.R/TP
		R917	0RH1001D622	1.0K 1/10W 5 D.R/TP
		R918	0RH1001D622	1.0K 1/10W 5 D.R/TP
		R919	0RH5600D622	560 1/10W 5 D.R/TP
		R921	0RH1001D622	1.0K 1/10W 5 D.R/TP
		R922	0RH1202D622	12K 1/10W 5 D.R/TP
		R923	0RH1802D622	18K 1/10W 5 D.R/TP
		R924	0RH3901D622	3.9K 1/10W 5 D.R/TP
		R926	0RD1001F608	1.0K 1/6W 5 TA26
		R930	0RH5600D622	560 1/10W 5 D.R/TP
		R950	0RH1002D622	10K 1/10W 5 D.R/TP
		R951	0RH1002D622	10K 1/10W 5 D.R/TP
		RP01	614-007A	2.7/2W CEMENT SMPS V
		RP02	0RD1503H600	150K 1/2W 5 A
		RP03	0RD1001F608	1.0K 1/6W 5 TA26
		RP04	0RS0562J600	56 1W 5 A
		RP05	0RD0221F608	2.2 1/6W 5 TA26
		RP06	0RW0101K600	1 2W 5% A
		RP07	0RD1201F608	1.2K 1/6W 5 TA26
		RP08	0RD2701F608	2.7K 1/6W 5 TA26
		RP09	0RN4701F408	4.7K 1/6W 1 TA26
		RP10	0RD4701F608	4.7K 1/6W 5 TA26
		RP13	0RD3900F608	390 1/6W 5 TA26
		RP14	0RD1000F608	100 1/6W 5 TA26
		RP15	0RD2203F608	220K 1/6W 5 TA26
		RP16	0RD1003F608	100K 1/6W 5 TA26
		RP21	0RN3001F408	3.0K 1/6W 1 TA26
		W014	0RD1500F608	150 1/6W 5 TA26
		W950	0RH0000D622	0 1/10W 5 D.R/TP
		W951	0RH0000D622	0 1/10W 5 D.R/TP
		W952	0RH0000D622	0 1/10W 5 D.R/TP
		W953	0RH0000D622	0 1/10W 5 D.R/TP
		W954	0RH0000D622	0 1/10W 5 D.R/TP
		W955	0RH0000D622	0 1/10W 5 D.R/TP
		W956	0RH0000D622	0 1/10W 5 D.R/TP
REMOCON RECEIVER				
		RC601	668-227C	RECE 15.0 3276A 2800 KOTEC
SCART				
		JK801	573-006C	RGB SOKET SR-21S3 21PIN (BK)
		JK802	573-006D	RGB (BLUE)
SWITCH				
		SW601	556-219A	SKHV10910A (GS ALPS)

RUN DATE : 95.09.27

S	AL	LOCA.NO	PART NO(GS)	SPECIFICATION
		SW602	556-219A	SKHV10910A (GS ALPS)
		SW603	556-219A	SKHV10910A (GS ALPS)
		SW604	556-219A	SKHV10910A (GS ALPS)
		SW605	556-219A	SKHV10910A (GS ALPS)
		SW606	556-219A	SKHV10910A (GS ALPS)
		SW607	556-219A	SKHV10910A (GS ALPS)
		SW6A0	556-219A	SKHV10910A (GS ALPS)
		SW6A1	556-219A	SKHV10910A (GS ALPS)
		SW6A2	556-219A	SKHV10910A (GS ALPS)
		SW6A3	556-219A	SKHV10910A (GS ALPS)
		SW6A4	556-219A	SKHV10910A (GS ALPS)
		SW6A5	556-219A	SKHV10910A (GS ALPS)
		SW6A6	556-219A	SKHV10910A (GS ALPS)
		SW6A7	556-219A	SKHV10910A (GS ALPS)
		SW6A9	556-219A	SKHV10910A (GS ALPS)
TUNER				
		TU701	521-412A	TUGG9-A01F G/ALPS FS 470 FTZ
VARIABLE RESISTOR				
		VR201	613-032U	RH0638C15R0WA (100K)
		VR202	613-032U	RH0638C15R0WA (100K)
		VR3A0	613-032U	RH0638C15R0WA (100K)
		VR401	613-032Q	RH0638CJ4R0WA (22K)
		VR402	613-032Q	RH0638CJ4R0WA (22K)
		VR403	613-032U	RH0638C15R0WA (100K)
		VR4A0	613-032Q	RH0638CJ4R0WA (22K)
		VR4A1	613-032S	RH0638CS4R0VA (47K)
		VR4A2	613-032S	RH0638CS4R0VA (47K)
		VR4A3	613-032S	RH0638CS4R0VA (47K)
		VR4A4	613-032Q	RH0638CJ4R0WA (22K)
		VR601	611-012I	RK09K117000324B
		VR602	611-012I	RK09K117000324B
		VR701	613-032Q	RH0638CJ4R0WA (22K)
CRYSTAL				
		X202	529-001K	32.768KHZ 3*8 SEIKO (20PPM)
		X301	529-029K	4.433619MHZ 15PPM HC-49/U KSS
		X3A0	529-022F	4.433619M 30PPM CL=16P DL=1M
		X501	529-020R	12.000000MHZ 30PPM NO-TU L=4.0
		X502	529-022E	11.71875 30PPM CL=10P DL=1M
		X701	529-021Q	18.432MHZ DBS KUKJAE
		X801	529-019A	CSB500F-9 MURATA
		X8A1	529-022V	17.734476MHZ CL-12P 25PPM LEAD
RESONATOR				
		X201	618-017A	FCR6.0MCT2 TDK-J(TAPING)
ZENER DIODE				
		ZD201	0DZ820009AA	MTZ8.2B TP ROHM-K
		ZD202	0DZ620009AA	MTZ6.2B (TA)
		ZD203	0DZ620009AA	MTZ6.2B (TA)
		ZD205	0DZ560009CA	MTZ5.6B TP ROHM-K
		ZD301	0DZ620009AA	MTZ6.2B (TA)
		ZD302	0DZ620009AA	MTZ6.2B (TA)
		ZD304	0DZ100009AA	MTZ10B MINI TP ROHM-K
		ZD401	0DZ100009AA	MTZ10B MINI TP ROHM-K
		ZD402	0DZ100009AA	MTZ10B MINI TP ROHM-K
		ZD403	0DZ100009AA	MTZ10B MINI TP ROHM-K

S	AL	LOCA.NO	PART NO(GS)	SPECIFICATION
		ZD501	0DZ620009AA	MTZ6.2B (TA)
		ZD601	0DZ160009BA	MTZ16B TP ROHM-K
		ZD602	0DZ160009BA	MTZ16B TP ROHM-K
		ZD701	0DZ100009AA	MTZ10B MINI TP ROHM-K
		ZD801	0DZ160009BA	MTZ16B TP ROHM-K
		ZD802	0DZ160009BA	MTZ16B TP ROHM-K
		ZD803	0DZ160009BA	MTZ16B TP ROHM-K
		ZD804	0DZ160009BA	MTZ16B TP ROHM-K
		ZD805	0DZ160009BA	MTZ16B TP ROHM-K
		ZD806	0DZ160009BA	MTZ16B TP ROHM-K
		ZD807	0DZ160009BA	MTZ16B TP ROHM-K
		ZD808	0DZ160009BA	MTZ16B TP ROHM-K
		ZD809	0DZ160009BA	MTZ16B TP ROHM-K
		ZD810	0DZ160009BA	MTZ16B TP ROHM-K
		ZD811	0DZ160009BA	MTZ16B TP ROHM-K
		ZD812	0DZ160009BA	MTZ16B TP ROHM-K
		ZD813	0DZ160009BA	MTZ16B TP ROHM-K
		ZD814	0DZ160009BA	MTZ16B TP ROHM-K
		ZD815	0DZ160009BA	MTZ16B TP ROHM-K
		ZD816	0DZ160009BA	MTZ16B TP ROHM-K
		ZD817	0DZ160009BA	MTZ16B TP ROHM-K
		ZD818	0DZ160009BA	MTZ16B TP ROHM-K
		ZD819	0DZ160009BA	MTZ16B TP ROHM-K
		ZD820	0DZ160009BA	MTZ16B TP ROHM-K
		ZD821	0DZ160009BA	MTZ16B TP ROHM-K
		ZD822	0DZ160009BA	MTZ16B TP ROHM-K
		ZD823	0DZ160009BA	MTZ16B TP ROHM-K
		ZD824	0DZ160009BA	MTZ16B TP ROHM-K
		ZD825	0DZ160009BA	MTZ16B TP ROHM-K
		ZD826	0DZ160009BA	MTZ16B TP ROHM-K
		ZD827	0DZ160009BA	MTZ16B TP ROHM-K
		ZD828	0DZ160009BA	MTZ16B TP ROHM-K
		ZD829	0DZ160009BA	MTZ16B TP ROHM-K
		ZD830	0DZ160009BA	MTZ16B TP ROHM-K
		ZD831	0DZ160009BA	MTZ16B TP ROHM-K
		ZD832	0DZ160009BA	MTZ16B TP ROHM-K
		ZD833	0DZ560009CA	MTZ5.6B TP ROHM-K
		ZD834	0DZ560009CA	MTZ5.6B TP ROHM-K
		ZDP01	0DZ330009AF	MTZ33B,TP,ROHM-K
		ZDP02	0DZ560009CA	MTZ5.6B TP ROHM-K